Macrocarpa
HT51 Vertical and Horizontal Shiplap Weatherboard
Technical Manual

Make your space, a healthy place.

www.healthbasedbuilding.com

This technical manual is based on best practice design principles inclusive of structure. Structural design, materials, risk management, fixings, installation, coatings and maintenance working in harmony to ensure long serving performance as a built environment. Cladding performance, appearance and durability can be impacted by individual design preferences. Any attempt to alter the design principles represented in this manual must be represented to Health Based Building for comment.

Technical Document No.	#074
Title	Macrocarpa HT51 Vertical and Horizontal Shiplap Weatherboard Technical Manual
Issue Date	19-05-2021
Version	1.0

DWG FILES AVAILABLE UPON REQUEST

Contents

Page	Content
1	Cover Page
2	Contents
4	**Earthen HT48 Vertical Shiplap Details Cover Sheet:**
5	Technical Drawings Sheet 1/14 – Concrete Foundation Detail
6	Technical Drawings Sheet 2/14 – Timber Foundation Detail
7	Technical Drawings Sheet 3/14 – External Corner Detail
8	Technical Drawings Sheet 4/14 – Internal Corner Detail
9	Technical Drawings Sheet 5/14 – Eave – Section Detail
10	Technical Drawings Sheet 6/14 – Barge – Section Detail
11	Technical Drawings Sheet 7/14 – Roof – Wall Ridge – Section Detail
12	Technical Drawings Sheet 8/14 – Canopy Junction – Section Detail
13	Technical Drawings Sheet 9/14 – Horizontal Control Joint
14	Technical Drawings Sheet 10/14 – Vertical Control Joint
15	Technical Drawings Sheet 11/14 – Typical Head and Sill Detail
16	Technical Drawings Sheet 12/14 – Typical Jamb Detail
17	Technical Drawings Sheet 13/14 – Deck Threshold Detail
18	Technical Drawings Sheet 14/14 – Pipe Penetration Plan & Section
19	**Earthen HT48 Horizontal Shiplap Details Cover Sheet:**
20	Technical Drawings Sheet 1/14 – Concrete Foundation Detail
21	Technical Drawings Sheet 2/14 – Timber Foundation Detail
22	Technical Drawings Sheet 3/14 – External Corner Detail
23	Technical Drawings Sheet 4/14 – Internal Corner Detail
24	Technical Drawings Sheet 5/14 – Eave – Section Detail
25	Technical Drawings Sheet 6/14 – Barge – Section Detail
26	Technical Drawings Sheet 7/14 – Roof – Wall Ridge – Section Detail
27	Technical Drawings Sheet 8/14 – Canopy Junction – Section Detail
28	Technical Drawings Sheet 9/14 – Horizontal Control Joint
29	Technical Drawings Sheet 10/14 – Vertical Control Joint
30	Technical Drawings Sheet 11/14 – Typical Head and Sill Detail
31	Technical Drawings Sheet 12/14 – Typical Jamb Detail
32	Technical Drawings Sheet 13/14 – Deck Threshold Detail
33	Technical Drawings Sheet 14/14 – Pipe Penetration Plan & Section
34	Nail fixing positions and scarf joint

Page	Content
35	Foreverbreathe™ Exterior Cladding & Decking Oil Coating Procedure
36	Foreverbreathe™ Exterior Cladding & Decking Oil MSDS
42	Micro-Pro Treatment MSDS
47	Storage and Handling
48	Grading and Length Specification

Note: The installation practices of Earthen Radiata HT51 vertical or horizontal shiplap cladding as detailed in the following pages is the same procedure to install Macrocarpa HT51 vertical or horizontal shiplap cladding

HT48 Earthen Vertical Shiplap Details

Sheet List

Sheet Number	Sheet Name
000	Cover Sheet
1/14	Concrete Foundation Detail
2/14	Timber Foundation Detail
3/14	External Corner Detail
4/14	Internal Corner Detail
5/14	Eave - Section Detail
6/14	Barge Eave - Section Details
7/14	Roof - Wall Ridge - Section Detail
8/14	Canopy Junction - Section Detail
9/14	Horizontal Control Joint
10/14	Plan Detail - Vertical Control Joint
11/14	Typical Head and Sill Detail
12/14	Typical Jamb - Plan Detail
13/14	Deck Threshold Detail
14/14	Pipe Penetration - Plan & Section Detail

150mm 100 50 10mm 0

06/06/2017 09:07:29

HEALTH BASED BUILDING™ natural selection

000

HT48 Vertical Shiplap Details Cover Sheet

DESIGN ARCHITECTURE

GRAPHIC SCALES

128 Montreal St. ph 03 9421977 fx 03 942 1948 Email admin@apdesign.co.nz www. apdesign.co.nz

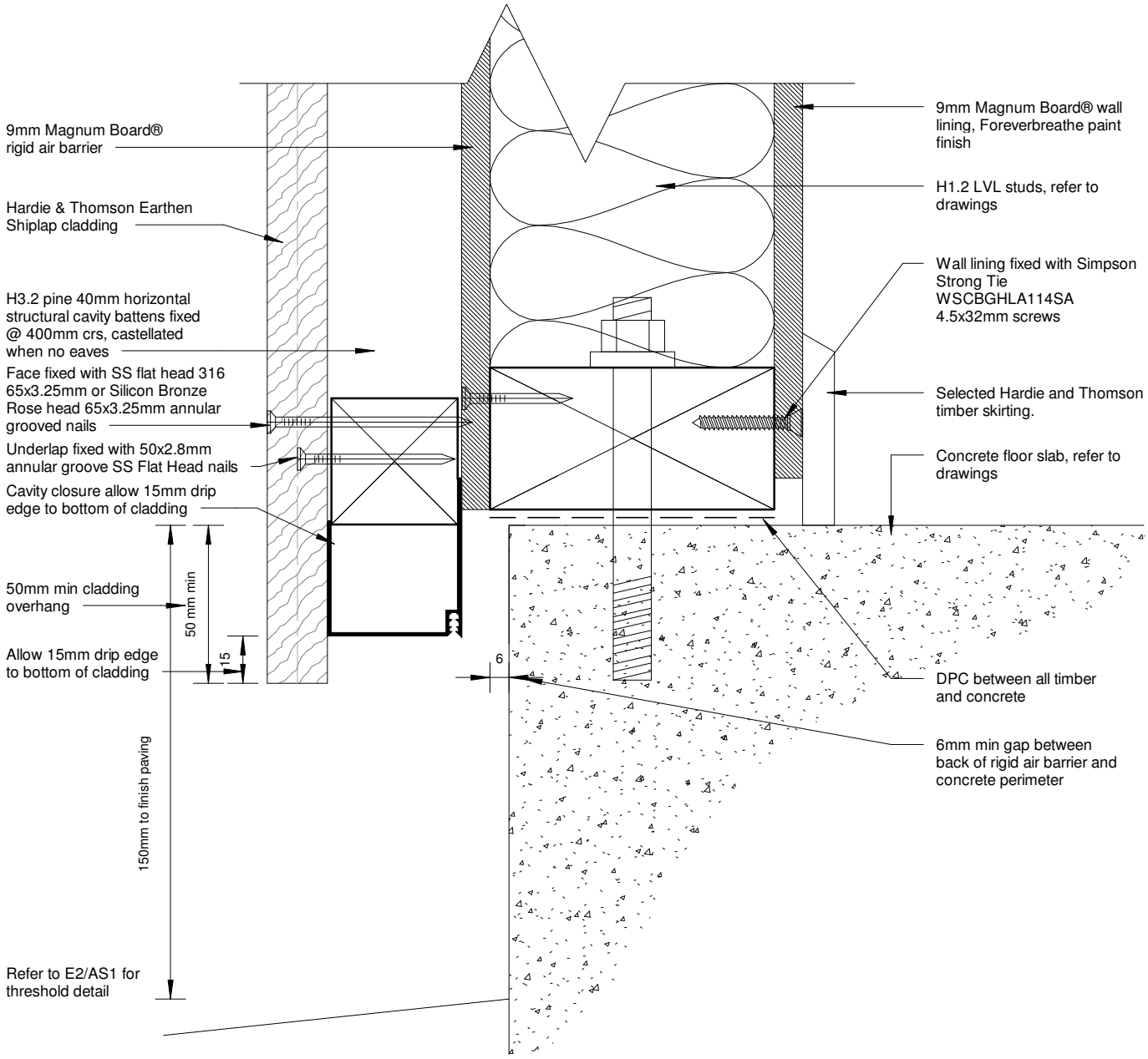

Concrete Foundation Detail

1 : 2

150mm 100 50 10mm 0

06/06/2017 09:07:30

HT48 Vertical Shiplap Details Concrete Foundation Detail

HEALTH BASED BUILDING™ natural selection

DESIGN ARCHITECTURE

GRAPHIC SCALES

128 Montreal St. ph 03 9421977 fx 03 942 1948 Email admin@apdesign.co.nz www. apdesign.co.nz

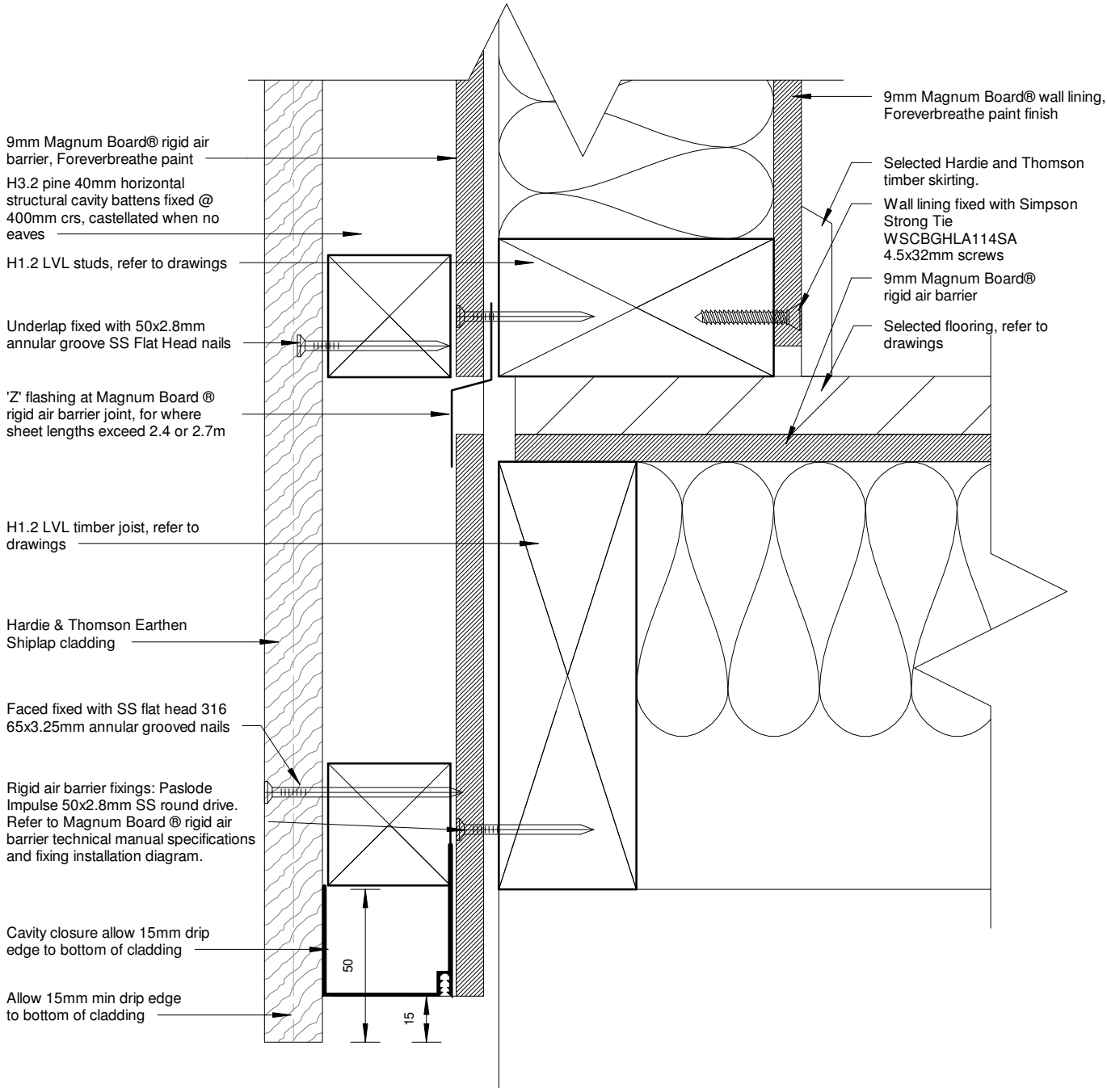

Timber Foundation Detail

1 : 2

150mm
100
50
10mm
0

06/06/2017 09:07:30

HT48 Shiplap Details Timber Foundation Detail

GRAPHIC SCALES
128 Montreal St. ph 03 9421977 fx 03 942 1948 Email admin@apdesign.co.nz www. apdesign.co.nz

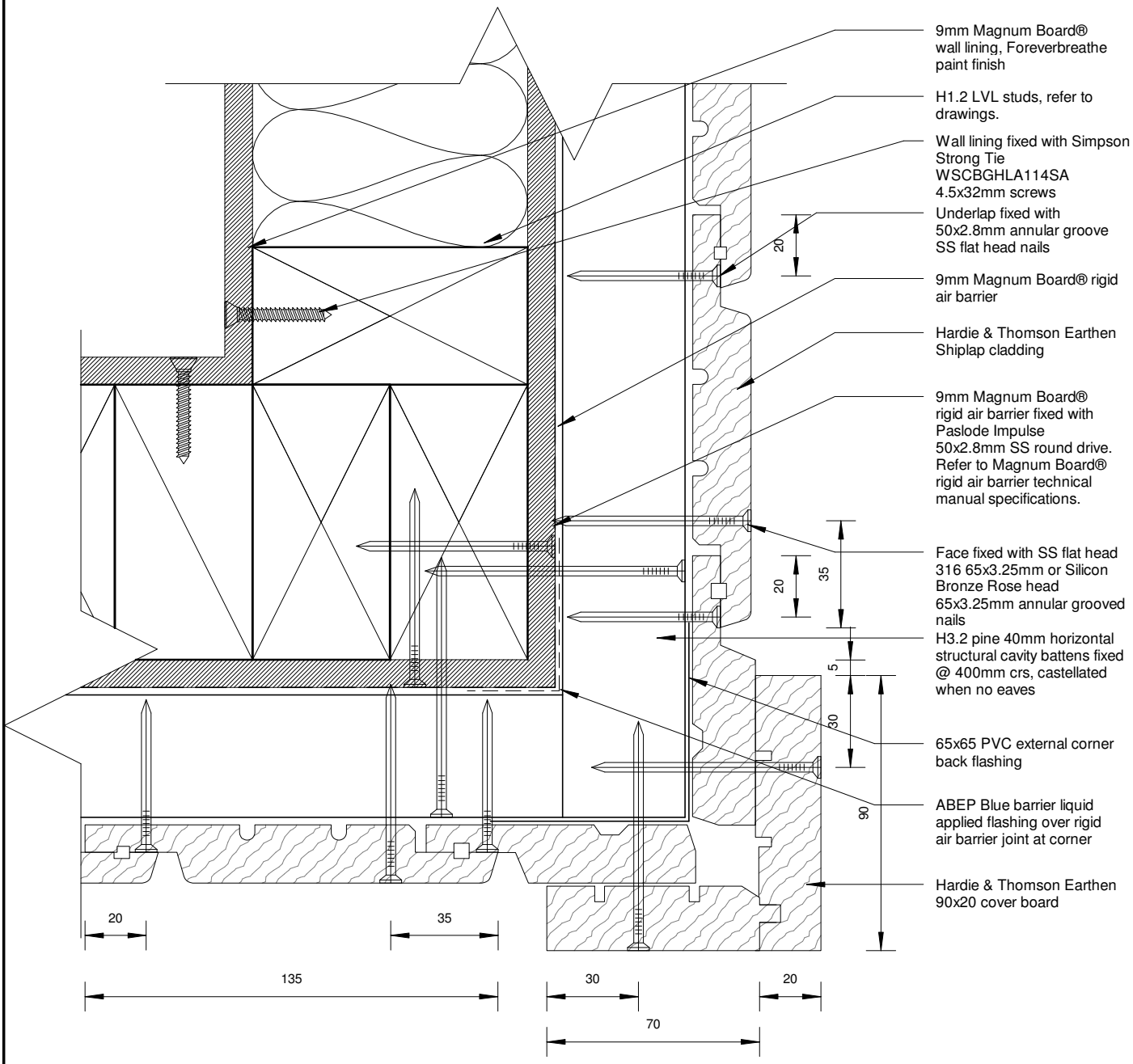

External Corner Detail

1 : 2

150mm
100
50
10mm
0

06/06/2017 09:07:30

HT48 Vertical Shiplap Details External Corner Detail

128 Montreal St. ph 03 9421977 fx 03 942 1948 Email admin@apdesign.co.nz www. apdesign.co.nz

GRAPHIC SCALES

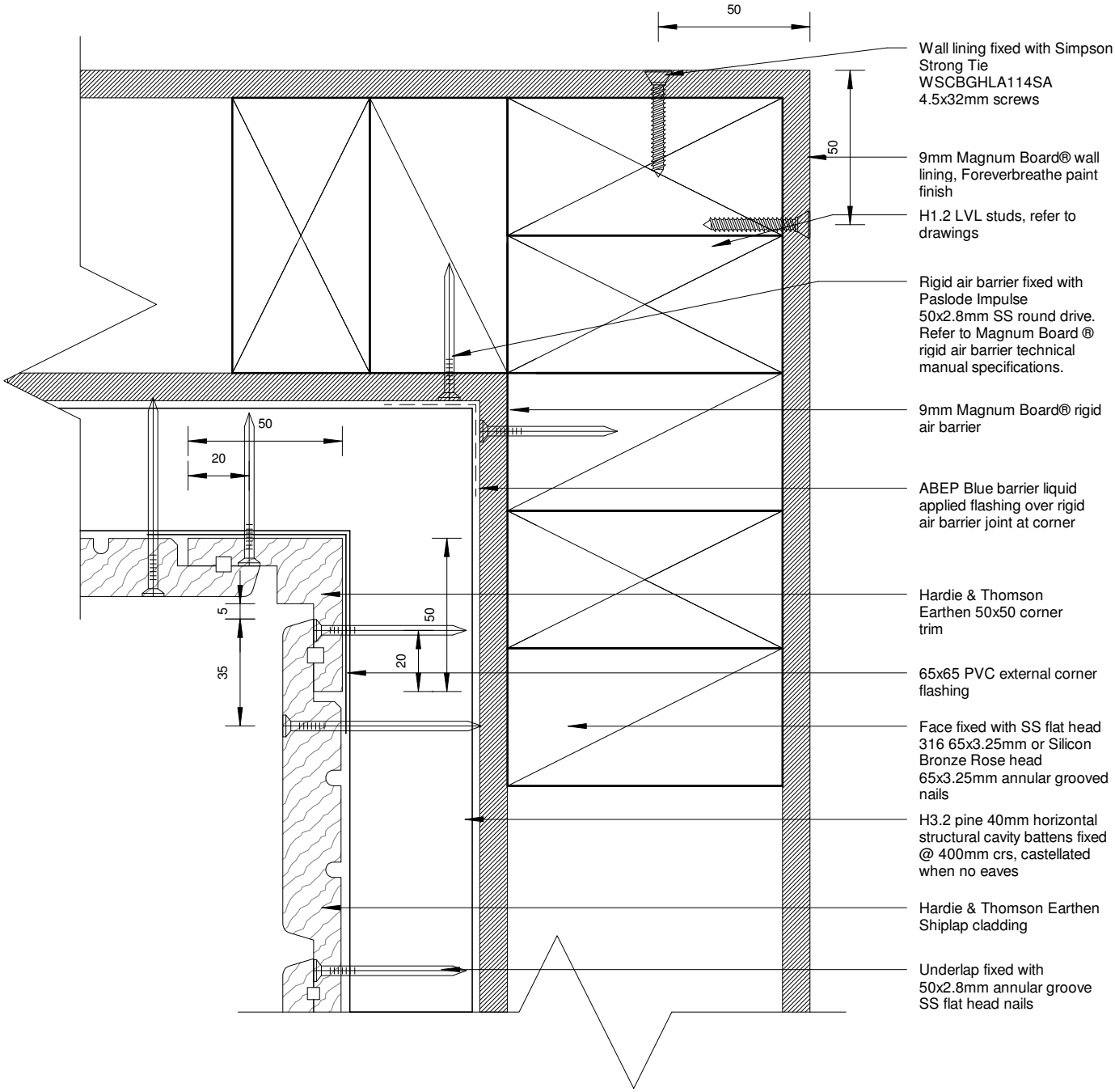

Internal Corner Detail

1 : 2

150mm
100
50
10mm
0

06/06/2017 09:07:30

HT48 Vertical Shiplap Details Internal Corner Detail

128 Montreal St. ph 03 9421977 fx 03 942 1948 Email admin@apdesign.co.nz www. apdesign.co.nz

GRAPHIC SCALES

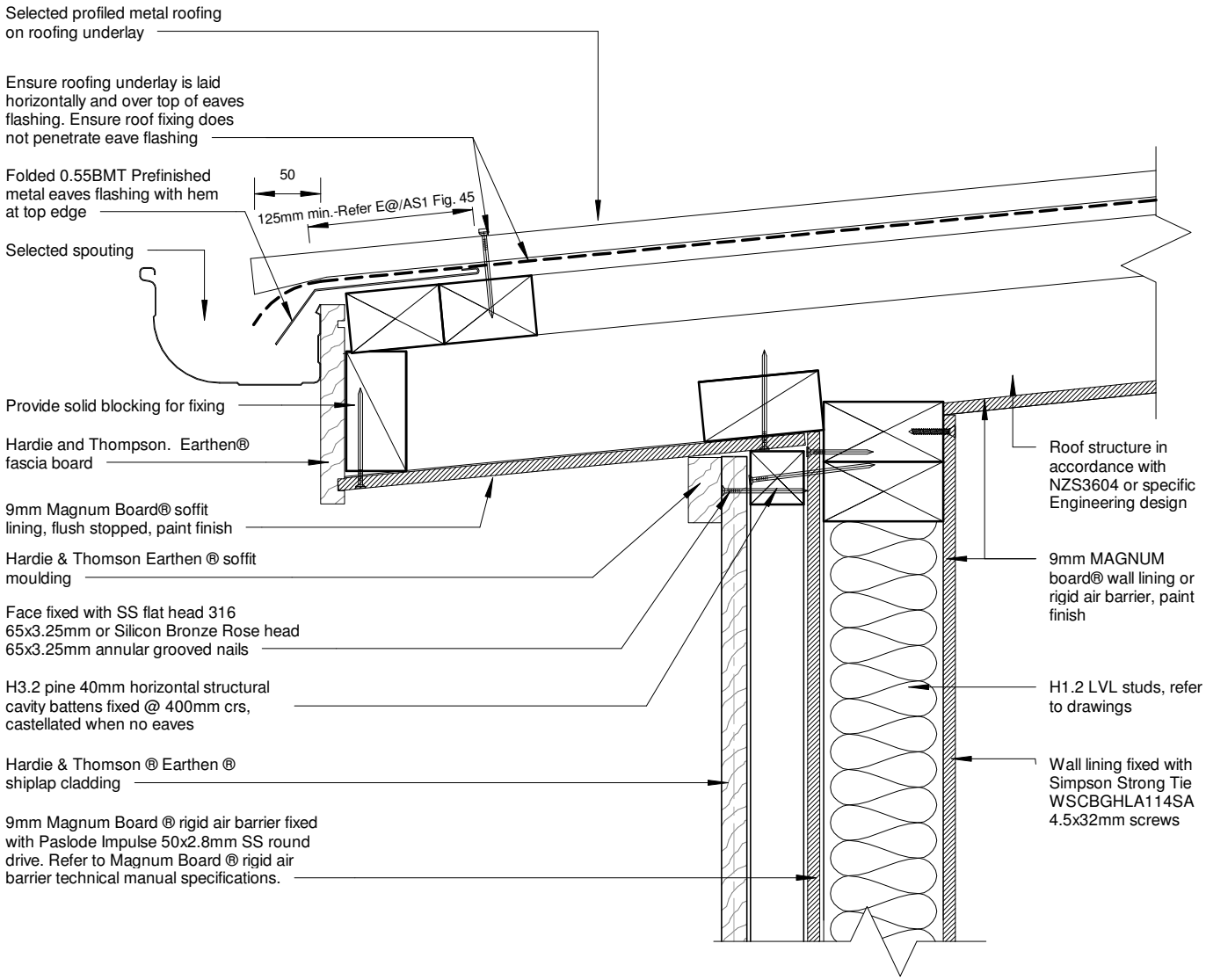

Note;
1. All Magnum Board®, ABEP® flashman® products to be installed by approved installers approved by NZSFP Ltd.
2. Where ABEP® blue barrier is in contact with biopin® paint, cemix acrylbond must be applied before application of biopin paint®.
3. Hardie & Thomson® Cover Boards and Scribers, Biopin Paint®, Terra Lana® Wool Insulation are supplied and installed by others.

Eave - Section Detail

1 : 5

150mm
100
50
10mm
0

06/06/2017 09:07:31

HT48 Vertical Shiplap Details Eave - Section Detail

HEALTH BASED BUILDING™ natural selection

DESIGN ARCHITECTURE

GRAPHIC SCALES

128 Montreal St. ph 03 9421977 fx 03 942 1948 Email admin@apdesign.co.nz www. apdesign.co.nz

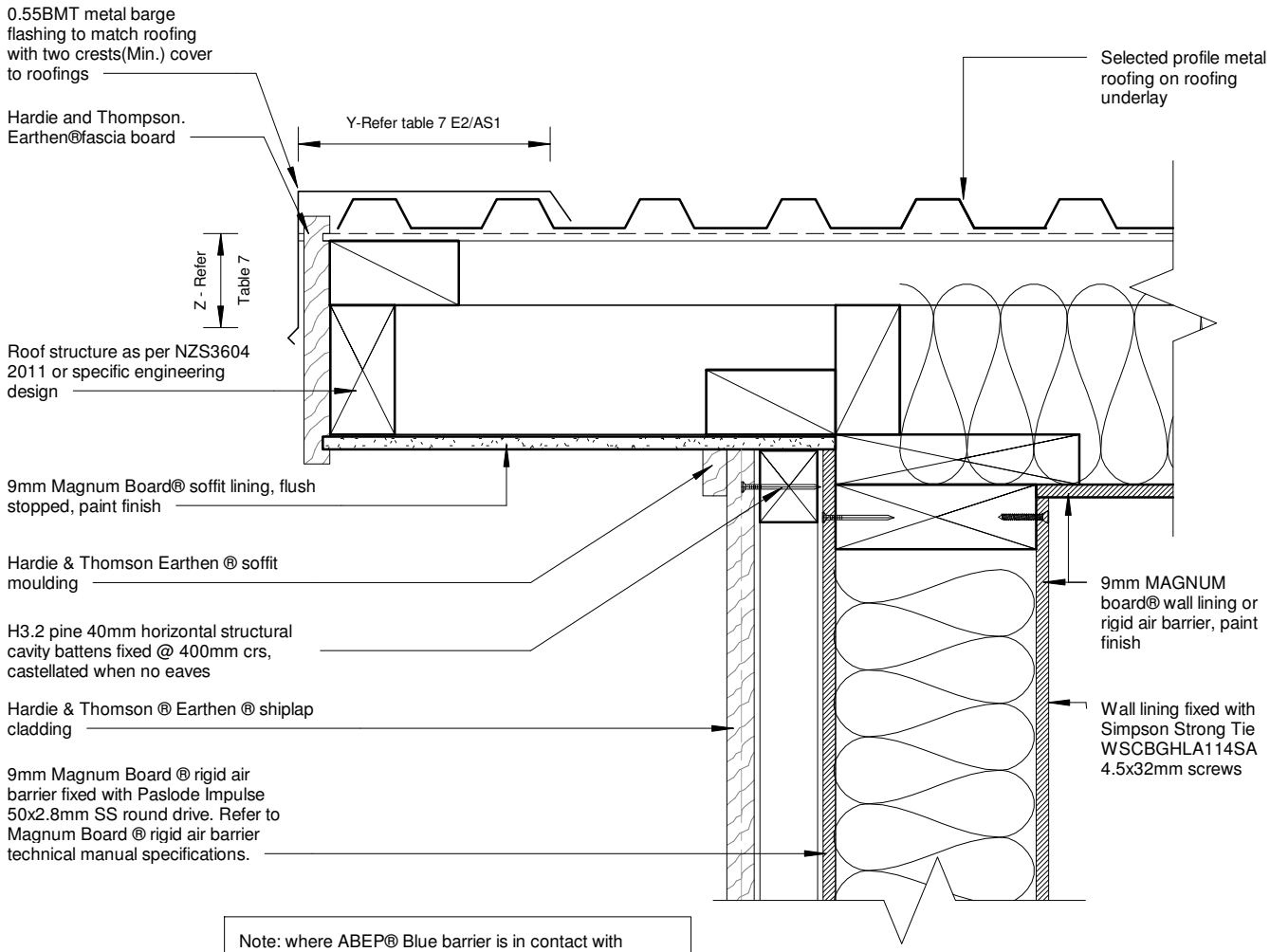

Note: where ABEP® Blue barrier is in contact with BIOPIN ® Paint, cemix acrylbond must be applied before application of BIOPIN paint ®

Barge Eave - Section Detail

1 : 5

150mm 100 50 10mm 0

06/06/2017 09:07:31

HT48 Vertical Shiplap Details Barge Eave - Section Details

HEALTH BASED BUILDING™ natural selection

DESIGN ARCHITECTURE

GRAPHIC SCALES

128 Montreal St. ph 03 9421977 fx 03 942 1948 Email admin@apdesign.co.nz www. apdesign.co.nz

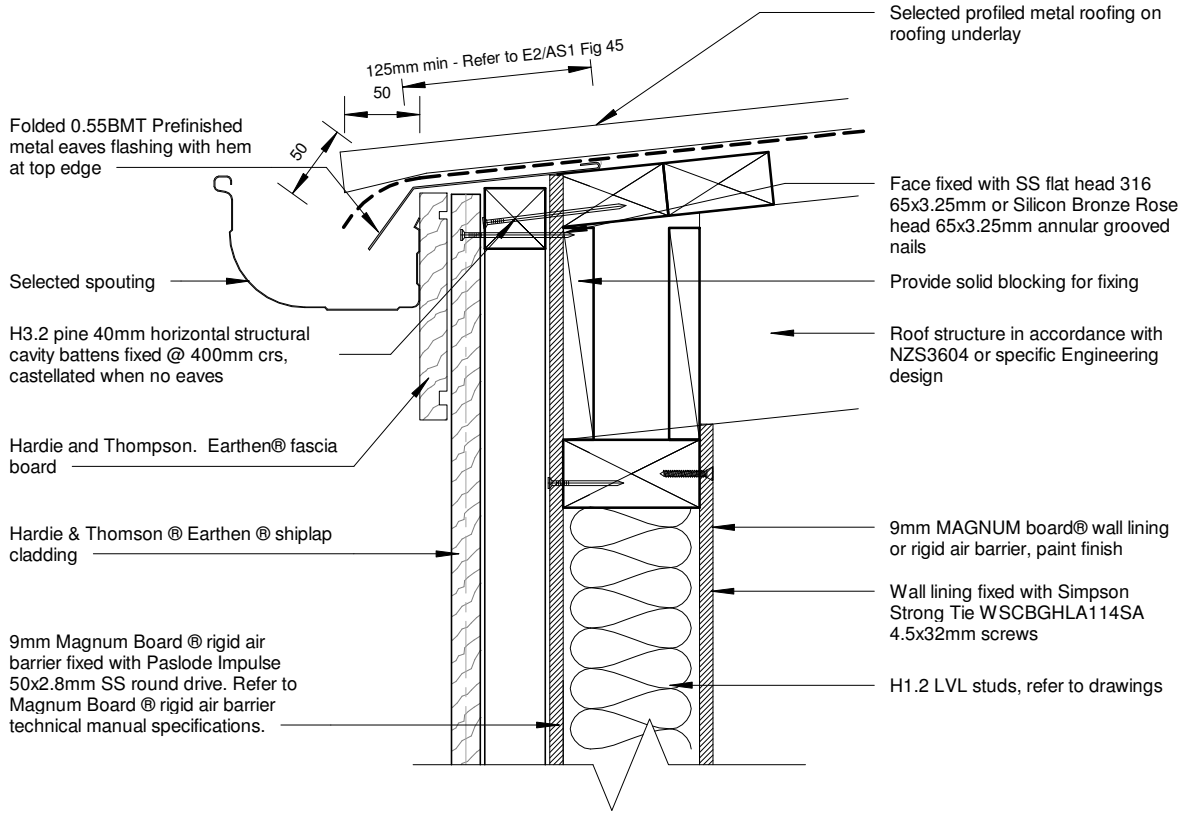

Barge - No Soffit - Section Detail

1 : 5

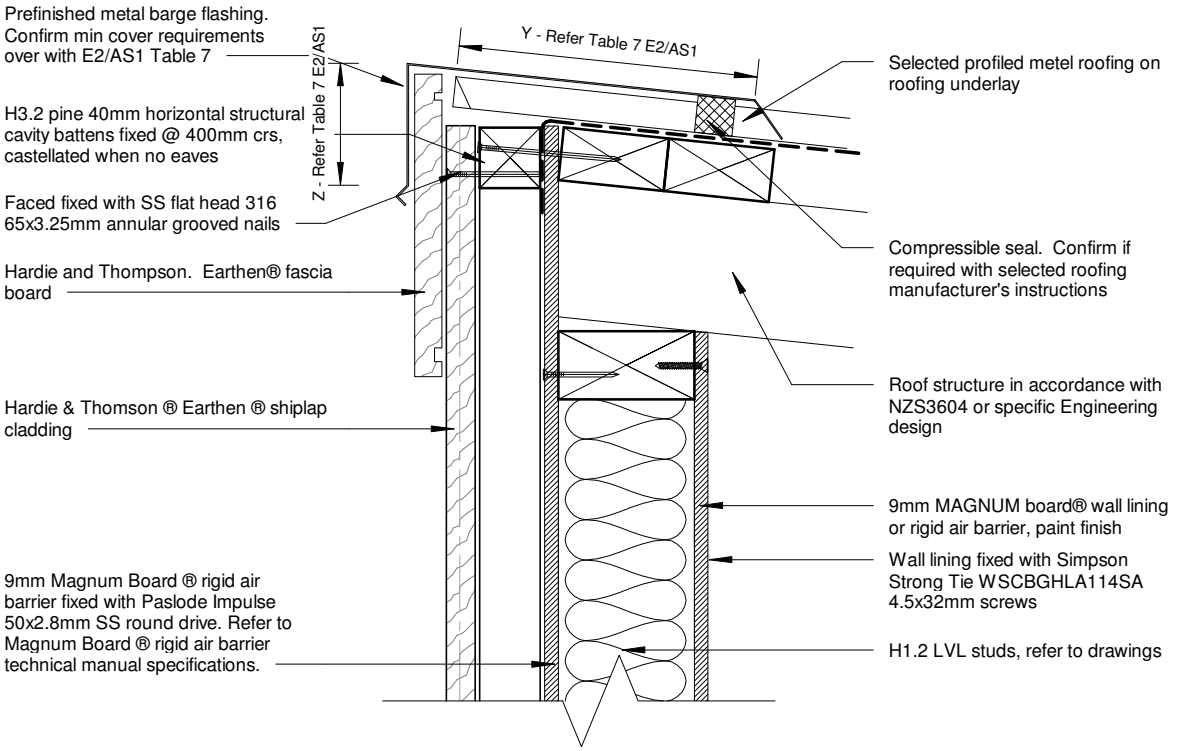

Roof - Wall ridge - Section Detail

1 : 5

HT48 Vertical Shiplap Details Roof - Wall Ridge - Section Detail

128 Montreal St. ph 03 9421977 fx 03 942 1948 Email admin@apdesign.co.nz www. apdesign.co.nz

GRAPHIC SCALES
150mm
100
50
0 10mm
06/06/2017 09:07:31

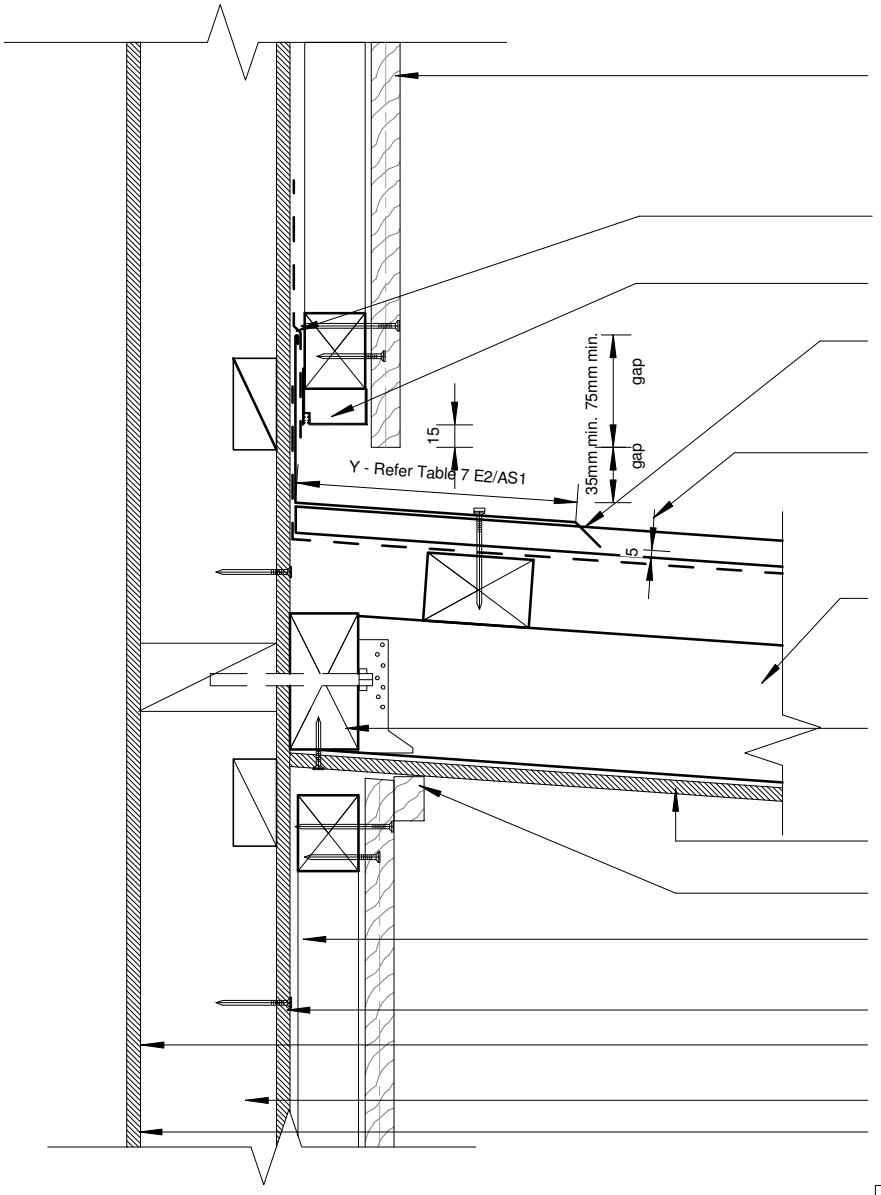

Hardies & Thompson ® Earthen ® shiplap cladding.

ABEP ® mulehide tape applied over top of apron flashing

Cavity closure allow 15mm drip edge to bottom of cladding

Prefinish metal apron flashing. 75mm Cover behind cladding. 35mm min. clearance between cladding and flashing. Refer to E2/AS1 Table 7 for cover over roofing

5mm max. Gap between flashing and roofing

Roof structure in accordance with NZS3504:2011 or specific engineer design

Timber stringer fixed to wall framing. Refer to NZS3604:2011

9mm Magnum board® soffit lining. Flush stopped.

Hardie & Thompson Earthen® soffit moulding

Prior to installation, pre coat back of batten with ABEP® Blue barrier liquid applied flashing

9mm Magnum Board® rigid air barrier

Wall lining fixed with Simpson Strong Tie WSCBGHLA114SA 4.5x32mm screws

H1.2 LVL studs, refer to drawings

9mm MAGNUM board® wall lining or rigid air barrier, paint finish

Note: Where ABEP® Blue barrier ie in contact with Biopin ® paint, cemix acrylbond must be applied before application of Biopin Paint ®

Canopy Junction - Section Detail

1 : 5

150mm 100 50 10mm 0

06/06/2017 09:07:31

GRAPHIC SCALES

HT48 Vertical Shiplap Details Canopy Junction - Section Detail

128 Montreal St. ph 03 9421977 fx 03 942 1948 Email admin@apdesign.co.nz www. apdesign.co.nz

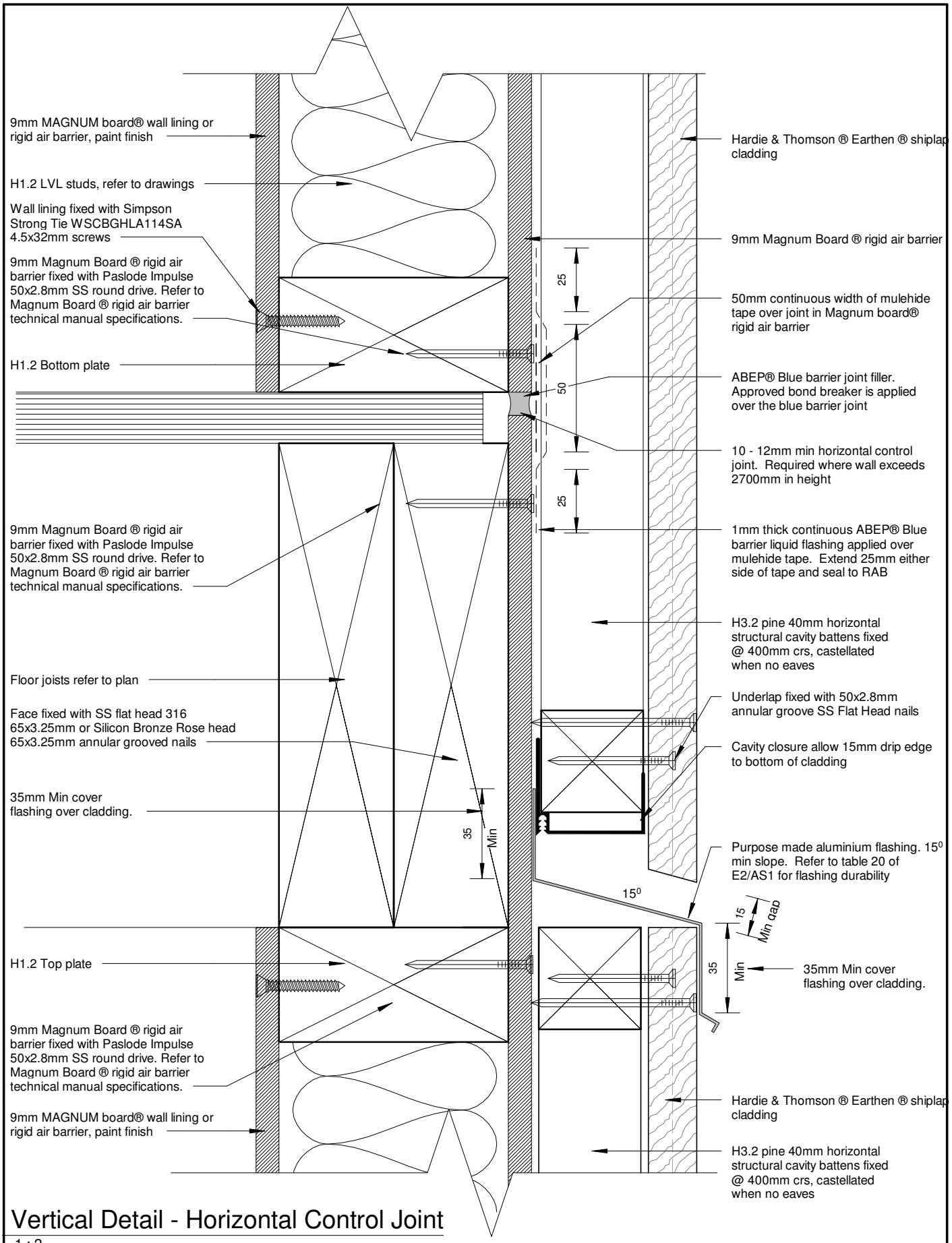

Vertical Detail - Horizontal Control Joint

1 : 2

06/06/2017 09:07:32

HT48 Vertical Shiplap Details Horizontal Control Joint

128 Montreal St. ph 03 9421977 fx 03 942 1948 Email admin@apdesign.co.nz www. apdesign.co.nz

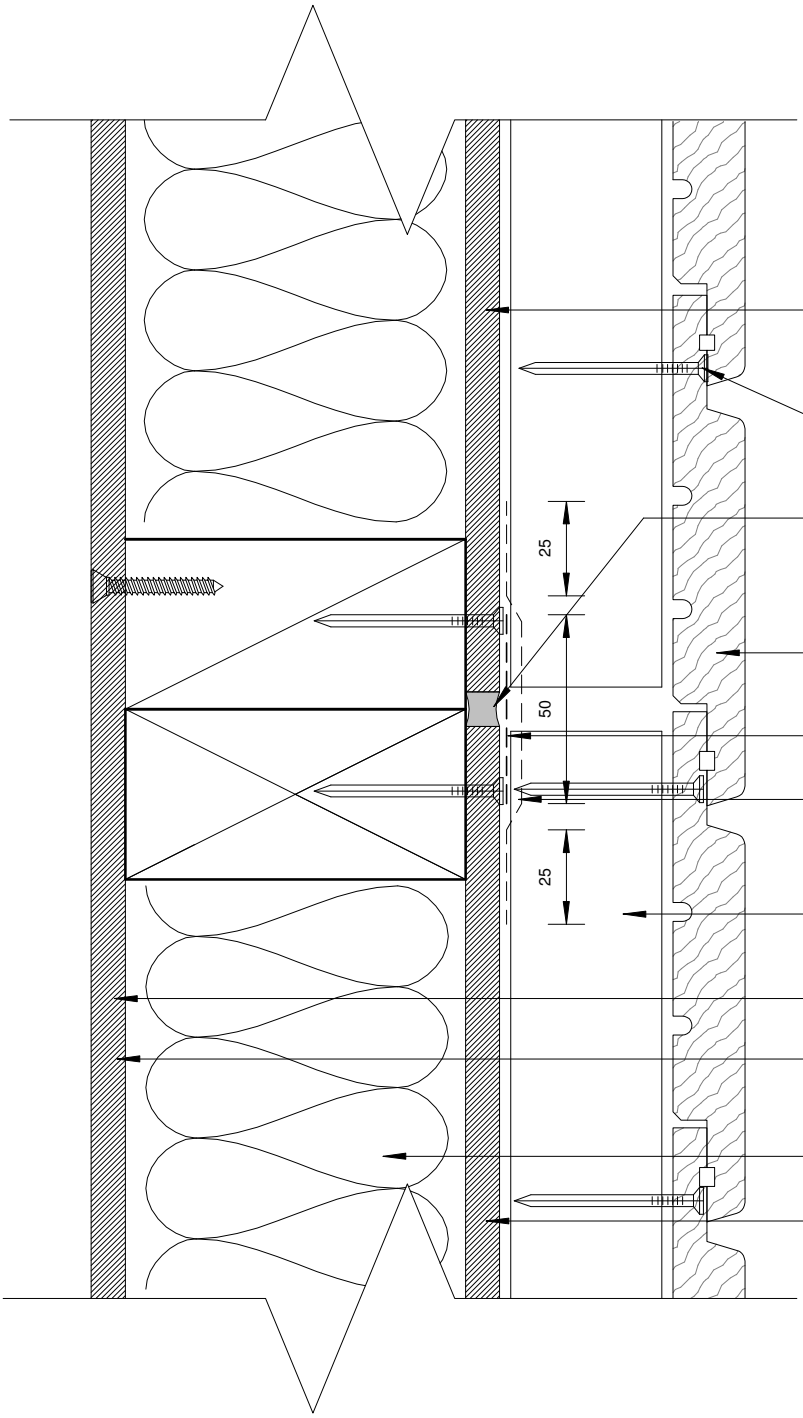

9mm Magnum Board ® rigid air barrier fixed with Paslode Impulse 50x2.8mm SS round drive. Refer to Magnum Board ® rigid air barrier technical manual specifications.

Underlap fixed with 50x2.8mm annular groove SS Flat Head nails

10 - 12mm min vertical control joint. Required where wall exceeds 6m in length. Fill with ABEP BEP® Blue barrier joint filler continuous bead of sealant

Hardie & Thomson ® Earthen ®shiplap cladding

50mm continuous width of mulehide tape over joint in Magnum RAB board

1mm thick continuous ABEP BEP® Blue barrier liquid flashing applied over mulehide tape. Extend 25mm either side of tape and seal to RAB

H3.2 pine 40mm horizontal structural cavity battens fixed @ 400mm crs, castellated when no eaves

9mm MAGNUM board® wall lining or rigid air barrier, paint finish

Wall lining fixed with Simpson Strong Tie WSCBGHLA114SA 4.5x32mm screws

H1.2 LVL studs, refer to drawings

9mm Magnum Board ® rigid air barrier fixed with Paslode Impulse 50x2.8mm SS round drive. Refer to Magnum Board ® rigid air barrier technical manual specifications.

Plan Detail - Vertical Control Joint

1 : 2

150mm 100 50 10mm 0

06/06/2017 09:07:32

HEALTH BASED BUILDING™ natural selection

10/14

HT48 Vertical Shiplap Details Plan Detail - Vertical Control Joint

DESIGN ARCHITECTURE

GRAPHIC SCALES

128 Montreal St. ph 03 9421977 fx 03 942 1948 Email admin@apdesign.co.nz www. apdesign.co.nz

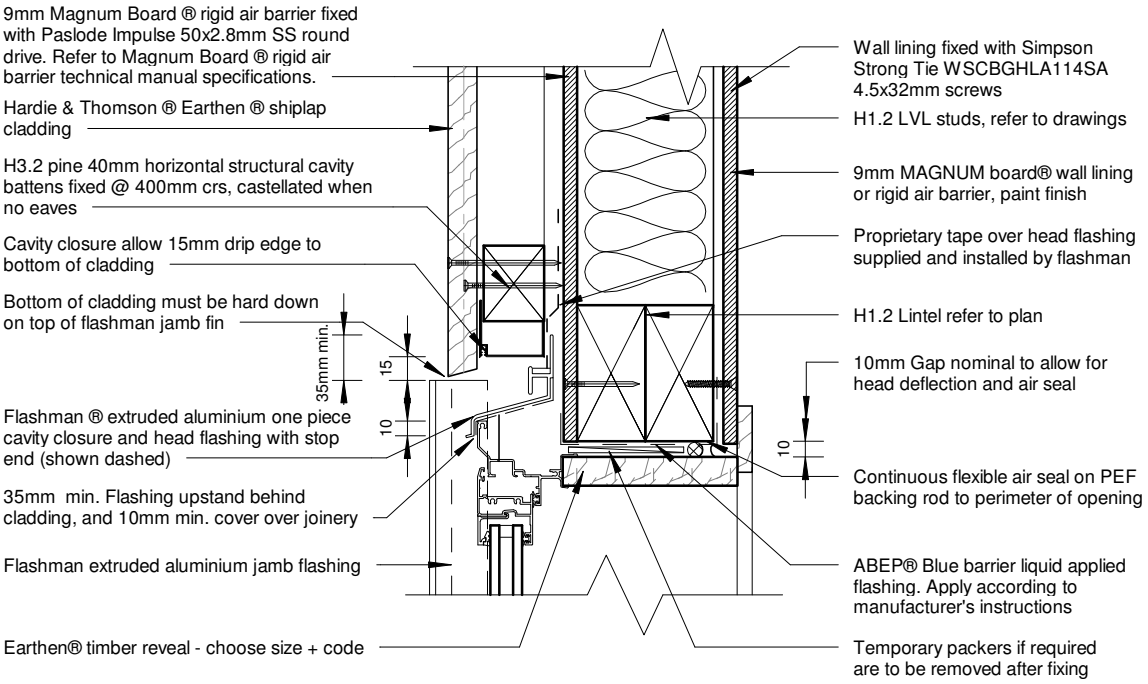

Typical Head - Section Detail

1 : 5

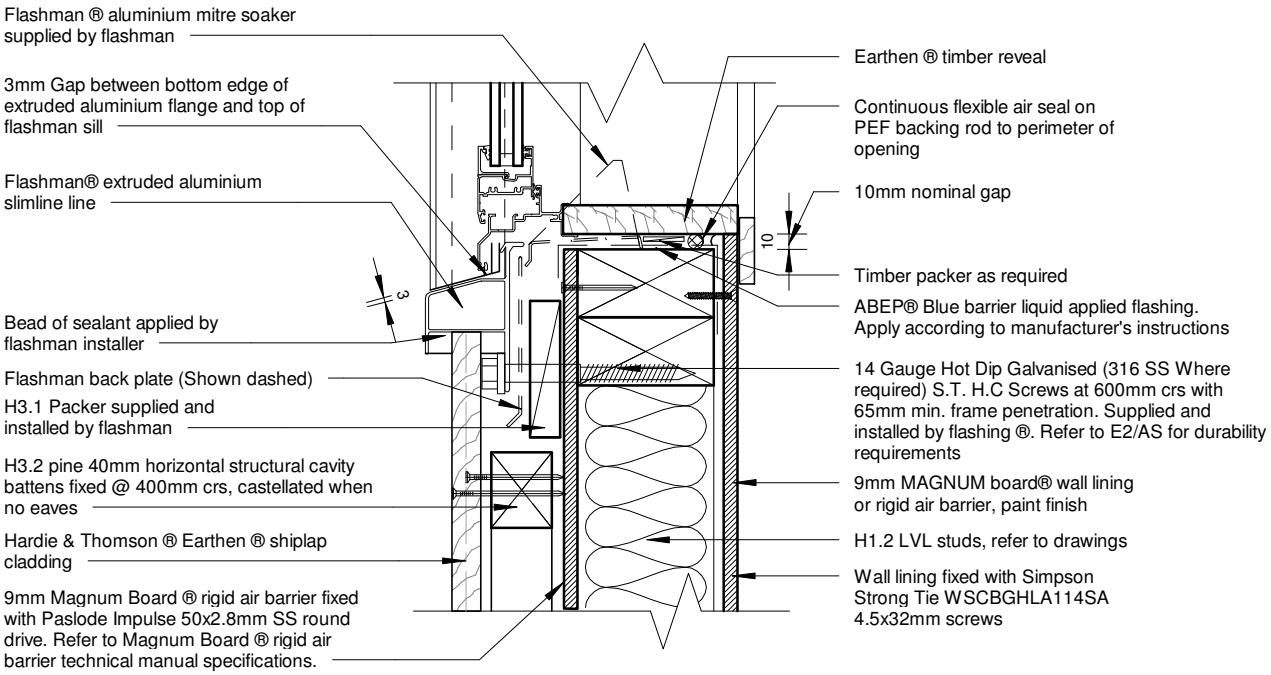

Typical Sill - Section Detail

1 : 5

150mm 100 50 10mm 0

06/06/2017 09:07:32

11/14

HT48 Vertical Shiplap Details Typical Head and Sill Detail

GRAPHIC SCALES

128 Montreal St. ph 03 9421977 fx 03 942 1948 Email admin@apdesign.co.nz www. apdesign.co.nz

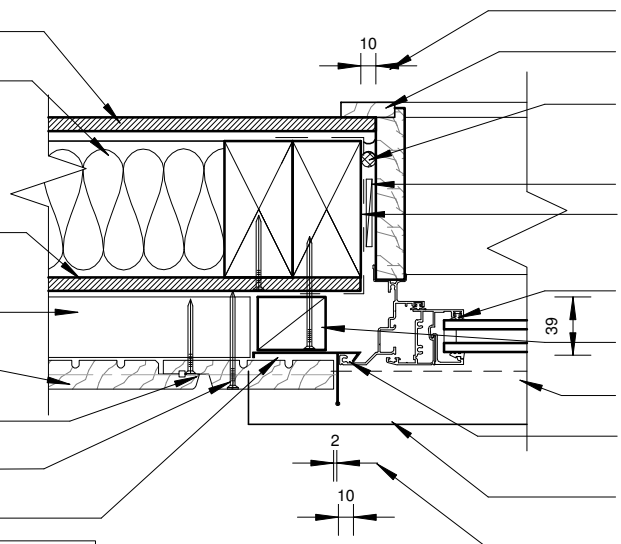

9mm MAGNUM board® wall lining or rigid air barrier, paint finish

H1.2 LVL studs, refer to drawings

9mm Magnum Board ® rigid air barrier fixed with Paslode Impulse nail 50x2.8mm SS round drive. Refer to Magnum Board ® rigid air barrier technical manual specifications.

H3.2 pine 40mm horizontal structural cavity battens fixed @ 400mm crs, castellated when no eaves

Hardie & Thomson ® Earthen ®shiplap cladding

Underlap fixed with 50x2.8mm annular groove SS Flat Head nails

Face fixed with Silicon Bronze Rose head 65x3.25 annular grooved nails

Flashman® extruded 40mm aluminium jamb flashing

10mm Nominal gap

Foreverbeech ® timber reveal and architrave

Continuous flexible air seal on PEF backing rod to perimeter of opening

Timber packer as required

ABEP® Blue barrier liquid applied flashing. Apply according to manufacturer's instruction

Selected aluminium joinery

H3.1 packer supplied and installed by Flashman

Head flashing over (Shown dashed)

10mm min. joinery cover over jamb flashing

Line of flashing slimline ® sill below

2mm gap between shiplap and jamb flashing.

Note: ABEP® Blue barrier residue shall be removed from the Magnum Board® before application of Forevebreath paint.

DO NOT FIX THROUGH JAMB FLASHING

Typical Jamb - Plan Detail

1 : 5

150mm 100 50 10mm 0

4/07/2018 4:11:14 PM

HEALTH BASED BUILDING™ natural selection

12/14

Vertical Shiplap Details Typical Jamb - Plan Detail

DESIGN ARCHITECTURE

GRAPHIC SCALES

128 Montreal St. ph 03 9421977 fx 03 942 1948 Email admin@apdesign.co.nz www. apdesign.co.nz

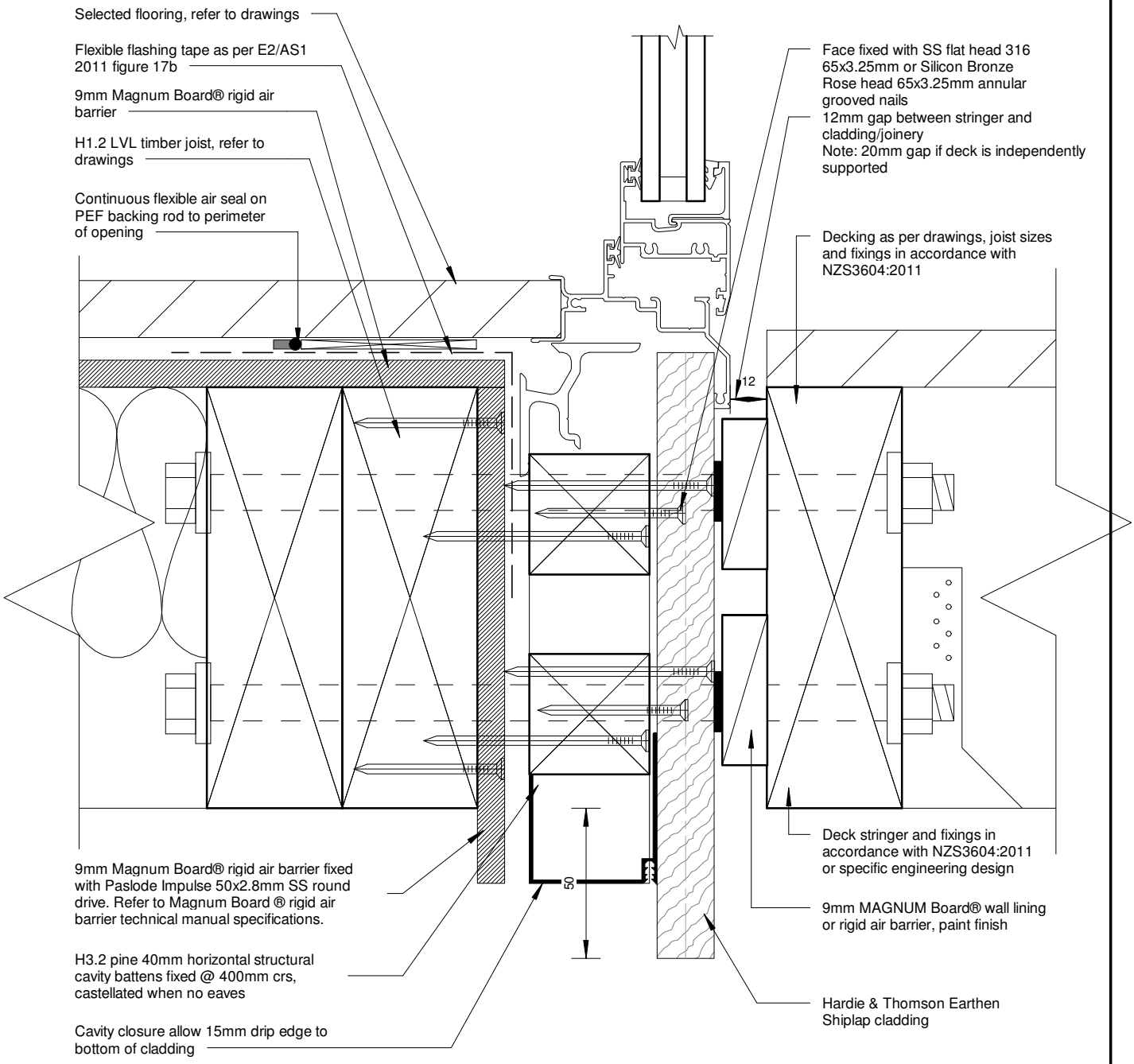

Deck Threshold Detail

1 : 2

150mm
100
50
10mm
0

06/06/2017 09:07:33

GRAPHIC SCALES

13/14

HT48 Vertical Shiplap Details Deck Threshold Detail

128 Montreal St. ph 03 9421977 fx 03 942 1948 Email admin@apdesign.co.nz www. apdesign.co.nz

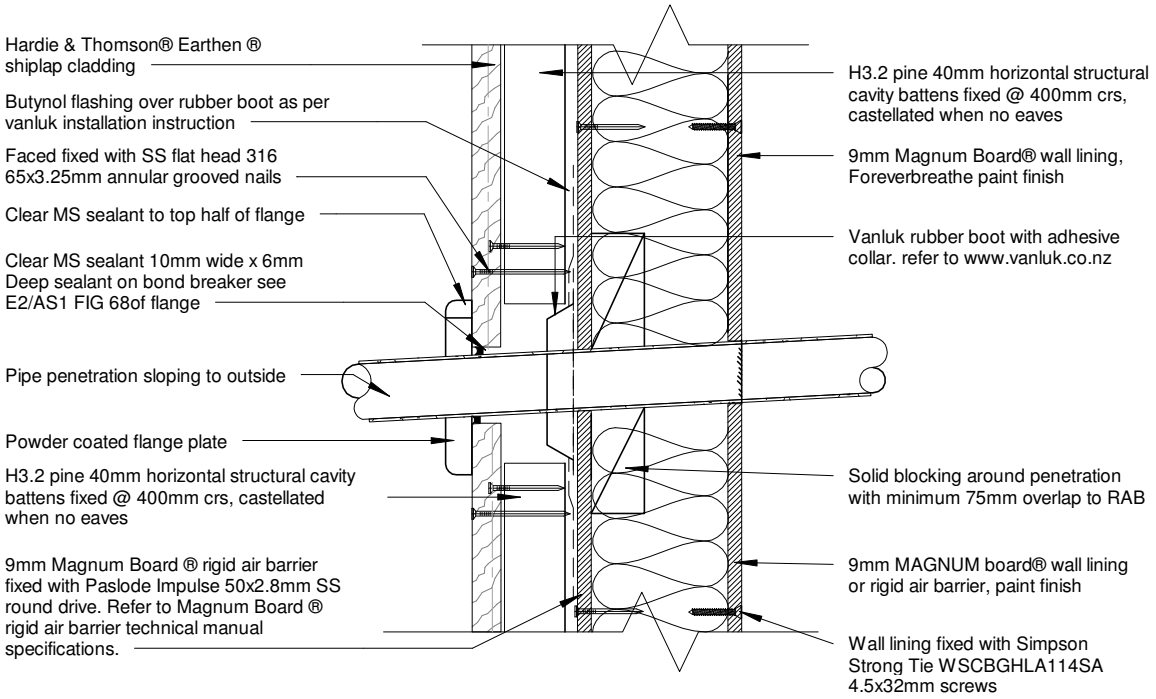

Pipe Penetration - Section Detail

1 : 5

Note:
1. Where ABEP® Blue barrier is in contact with Biopin ® paint, cemix acrylbond must be applied before application of biopin paint ®

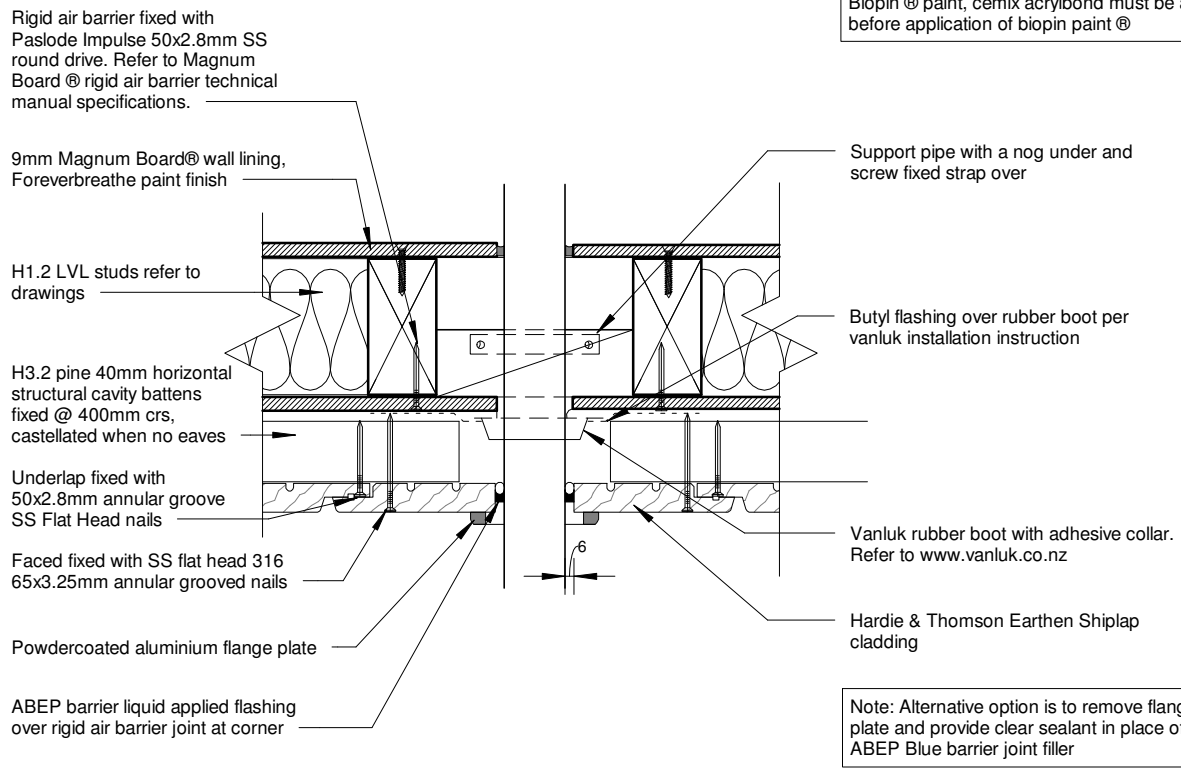

Note: Alternative option is to remove flange plate and provide clear sealant in place of ABEP Blue barrier joint filler

Pipe Penetration - Plan Detail

1 : 5

150mm 100 50 10mm 0

06/06/2017 09:07:33

14/14

Hardie & Thomson Vertical Shiplap Details Pipe Penetration - Plan & Section Detail

DESIGN ARCHITECTURE

GRAPHIC SCALES

128 Montreal St. ph 03 9421977 fx 03 942 1948 Email admin@apdesign.co.nz www. apdesign.co.nz

HT48 Earthen Horizontal Shiplap Details

Sheet List	
Sheet Number	Sheet Name

000	Cover Sheet
1/14	Concrete Foundation Detail
2/14	Timber Foundation Detail
3/14	External Corner Detail
4/14	Internal Corner Detail
5/14	Eave - Section Detail
6/14	Barge - Section Detail
7/14	Roof - Wall Ridge - Section Detail
8/14	Canopy Junction - Section Detail
9/14	Horizontal Control Joint
10/14	Vertical Control Joint
11/14	Typical Head and Sill Detail
12/14	Typical Jamb Detail
13/14	Deck Threshold Detail
14/14	Pipe Penetration - Plan & Section Detail

150mm 100 50 10mm 0

06/06/2017 09:04:29

HEALTH BASED BUILDING™ natural selection

000

HT48 Horizontal Shiplap Details Cover Sheet

DESIGN ARCHITECTURE

GRAPHIC SCALES

128 Montreal St. ph 03 9421977 Email admin@apdesign.co.nz www. apdesign.co.nz

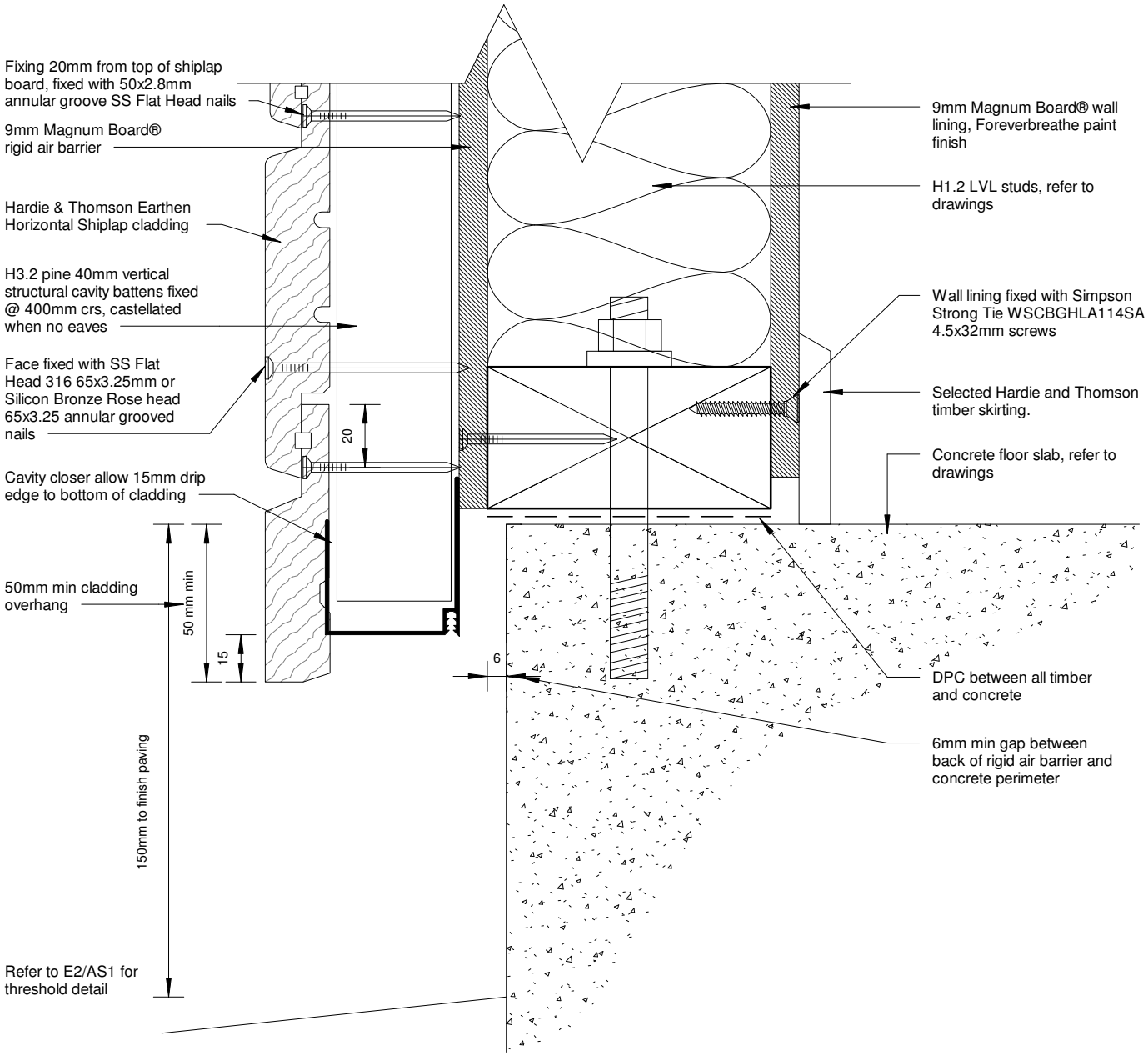

Concrete Foundation Detail

1 : 2

150mm 100 50 0 10mm

06/06/2017 09:04:29

GRAPHIC SCALES

1/14

HT48 Horizontal Shiplap Details Concrete Foundation Detail

128 Montreal St. ph 03 9421977 Email admin@apdesign.co.nz www. apdesign.co.nz

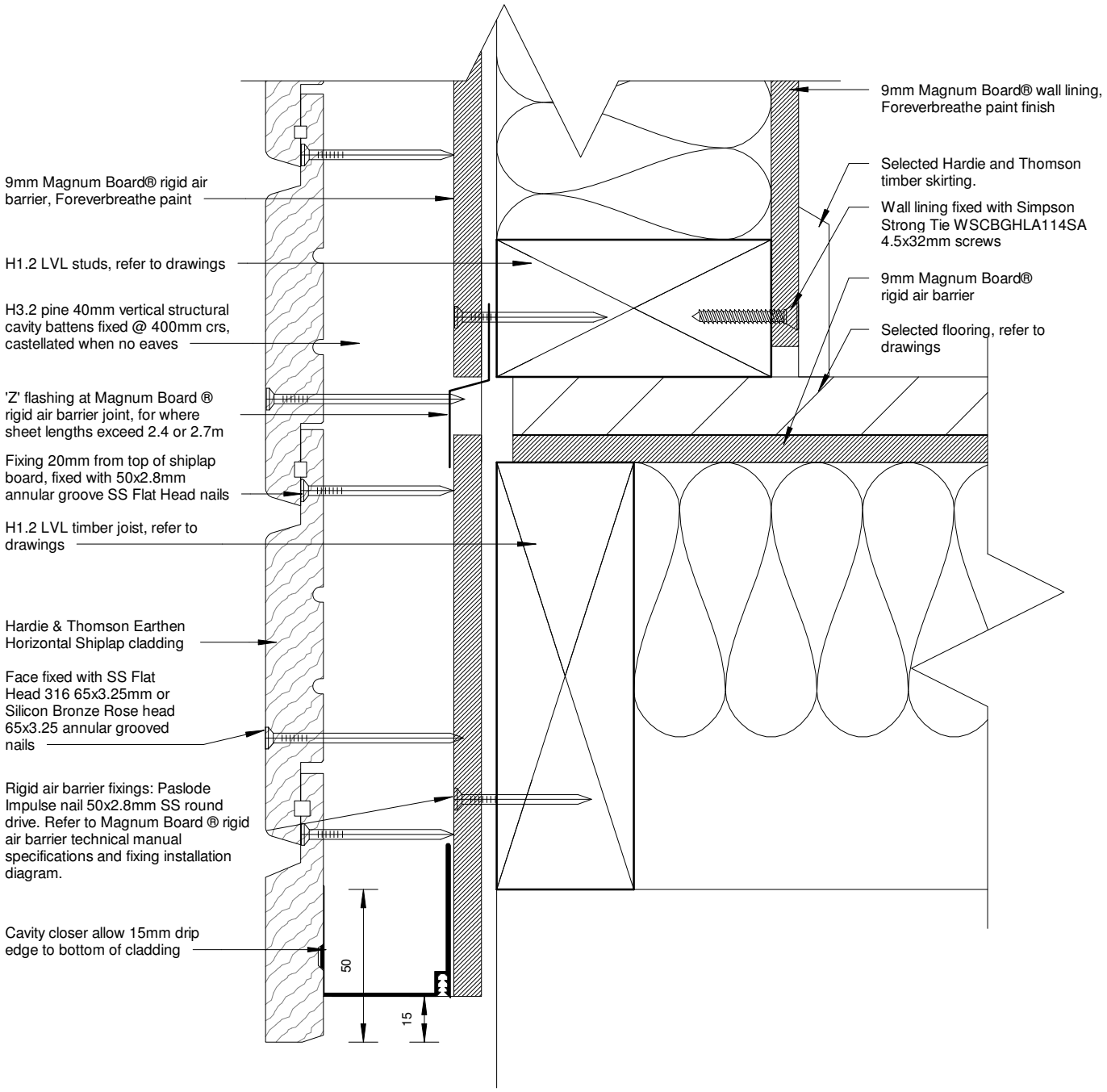

Timber Foundation Detail

1 : 2

150mm
100
50
10mm
0

06/06/2017 09:04:29

HT48 Horizontal Shiplap Details Timber Foundation Detail

GRAPHIC SCALES

128 Montreal St. ph 03 9421977 Email admin@apdesign.co.nz www. apdesign.co.nz

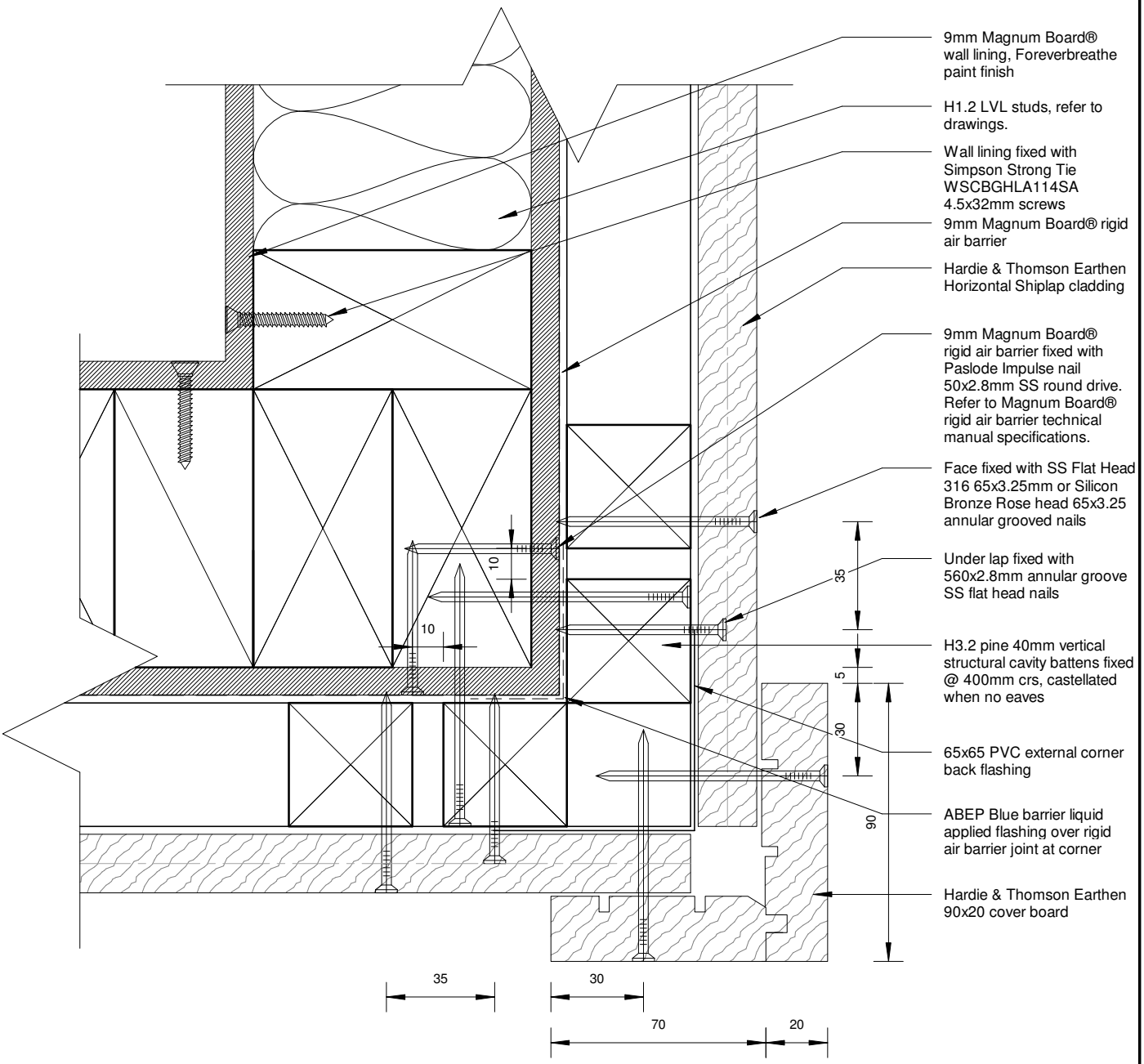

External Corner Detail

1 : 2

150mm
100
50
10mm
0

06/06/2017 09:04:30

GRAPHIC SCALES

HT48 Horizontal Shiplap Details External Corner Detail

128 Montreal St. ph 03 9421977 Email admin@apdesign.co.nz www. apdesign.co.nz

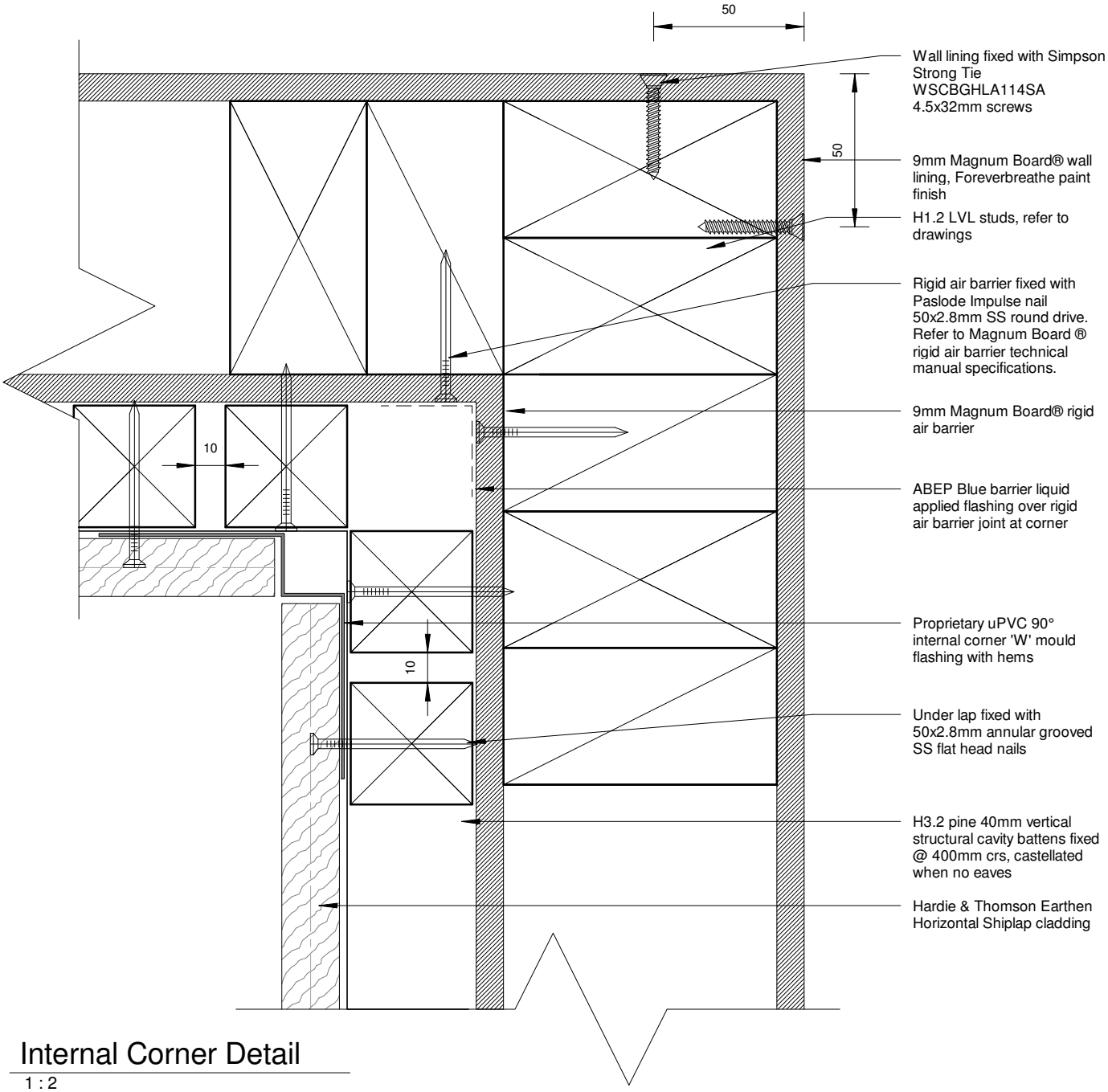

Internal Corner Detail

1 : 2

150mm
100
50
10mm
0

06/06/2017 09:04:30

HT48 Horizontal Shiplap Details Internal Corner Detail

GRAPHIC SCALES

128 Montreal St. ph 03 9421977 Email admin@apdesign.co.nz www. apdesign.co.nz

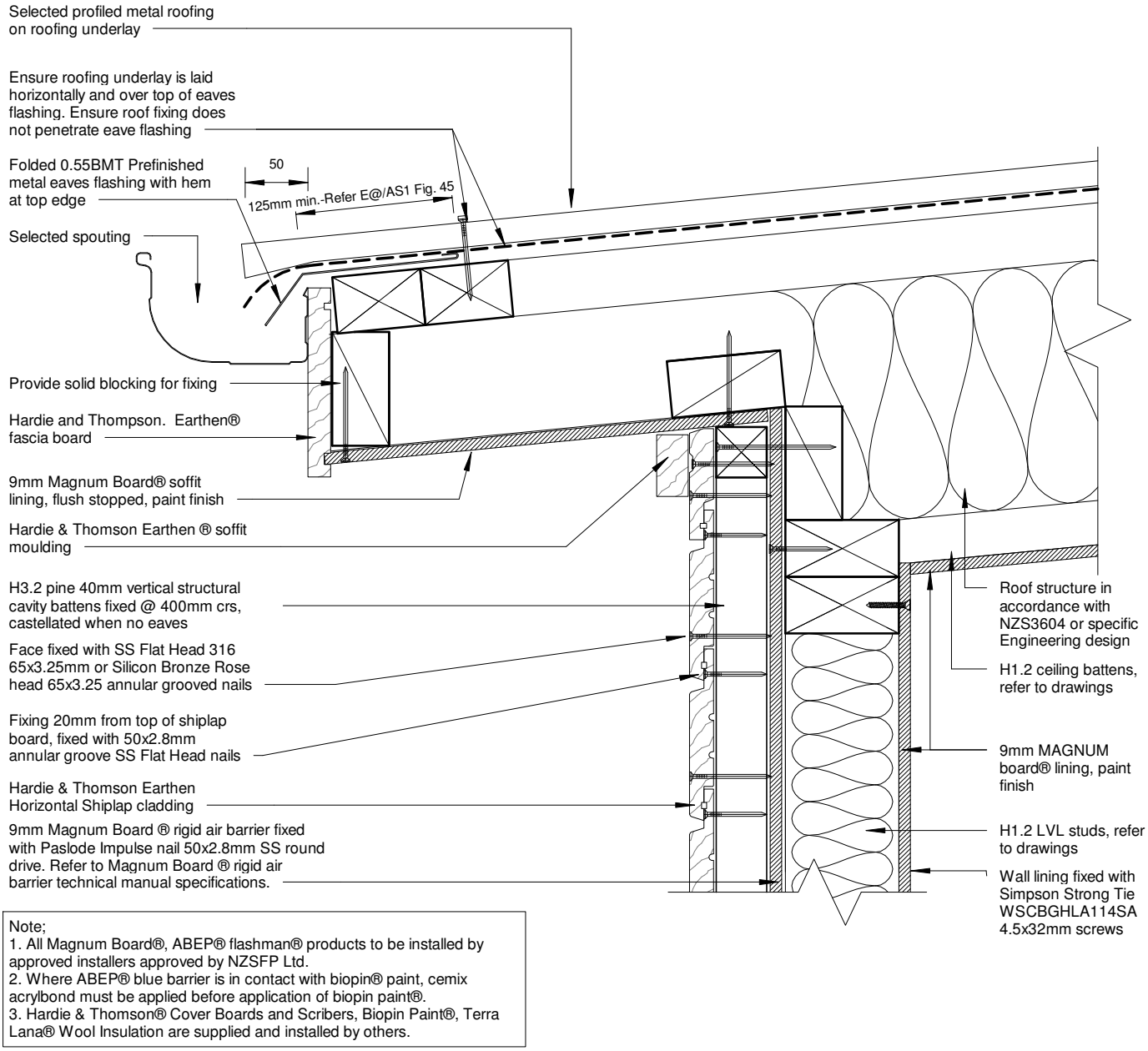

Note;
1. All Magnum Board®, ABEP® flashman® products to be installed by approved installers approved by NZSFP Ltd.
2. Where ABEP® blue barrier is in contact with biopin® paint, cemix acrylbond must be applied before application of biopin paint®.
3. Hardie & Thomson® Cover Boards and Scribers, Biopin Paint®, Terra Lana® Wool Insulation are supplied and installed by others.

Eave - Section Detail

1 : 5

150mm
100
50
10mm
0

06/06/2017 09:04:30

HT48 Horizontal Shiplap Details Eave - Section Detail

HEALTH BASED BUILDING™ natural selection

DESIGN ARCHITECTURE

GRAPHIC SCALES

128 Montreal St. ph 03 9421977 Email admin@apdesign.co.nz www. apdesign.co.nz

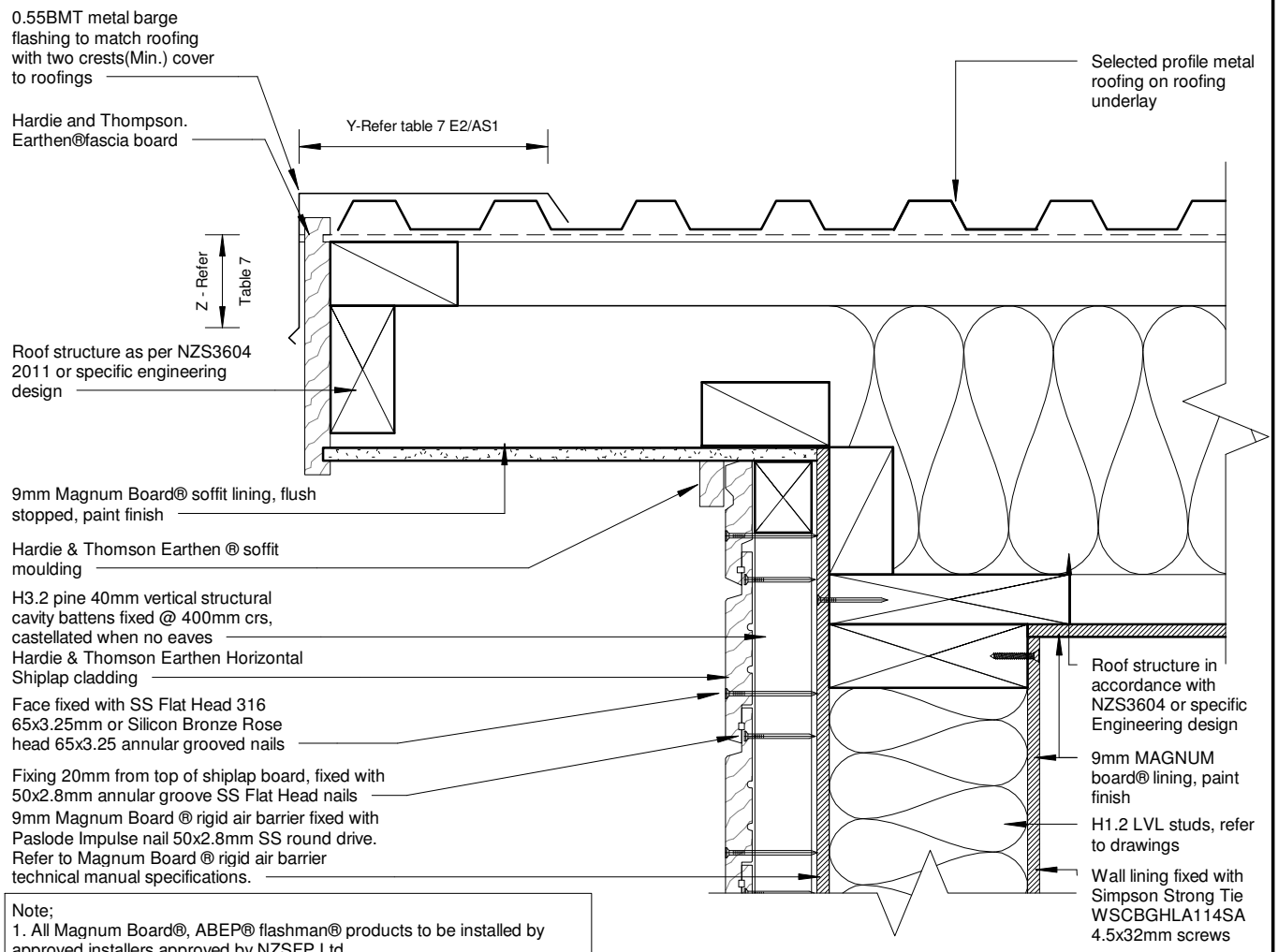

Note;
1. All Magnum Board®, ABEP® flashman® products to be installed by approved installers approved by NZSFP Ltd.
2. Where ABEP® blue barrier is in contact with biopin® paint, cemix acrylbond must be applied before application of biopin paint®.
3. Hardie & Thomson® Cover Boards and Scribers, Biopin Paint®, Terra Lana® Wool Insulation are supplied and installed by others.

Barge - Sectional Detail

1 : 5

150mm 100 50 10mm 0

06/06/2017 09:04:30

HT48 Horizontal Shiplap Details Barge - Section Detail

GRAPHIC SCALES

128 Montreal St. ph 03 9421977 Email admin@apdesign.co.nz www. apdesign.co.nz

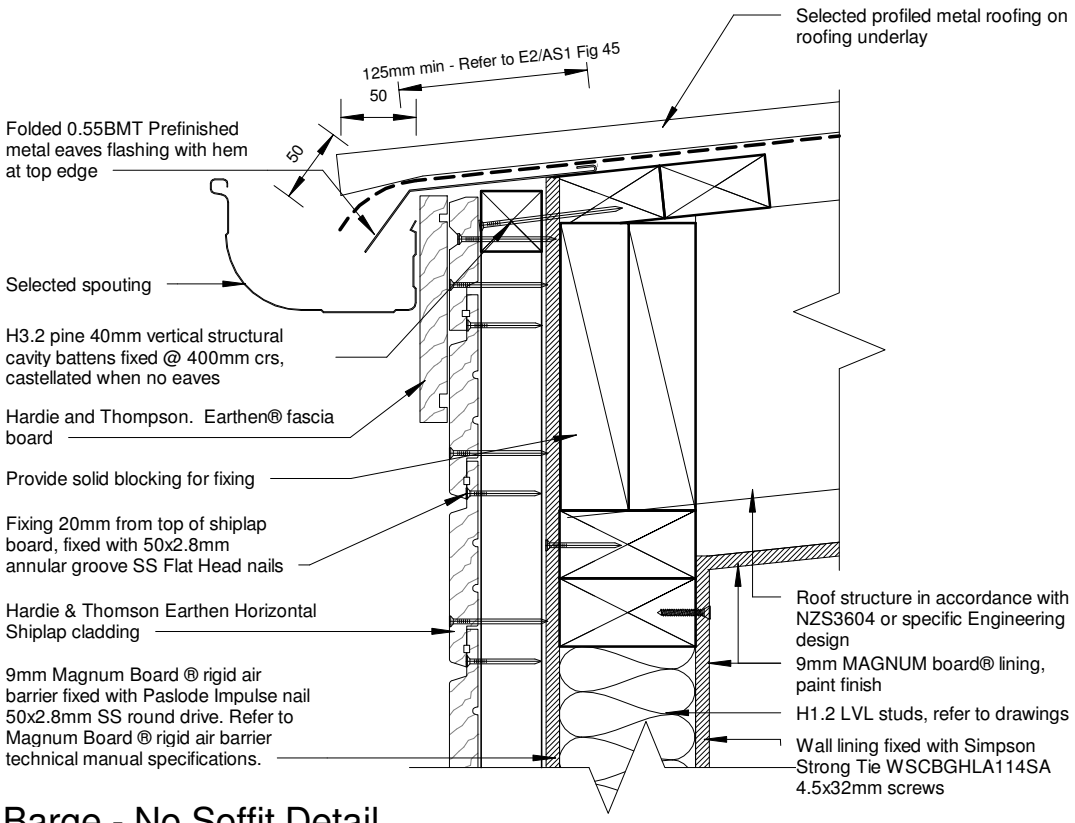

Barge - No Soffit Detail

1 : 5

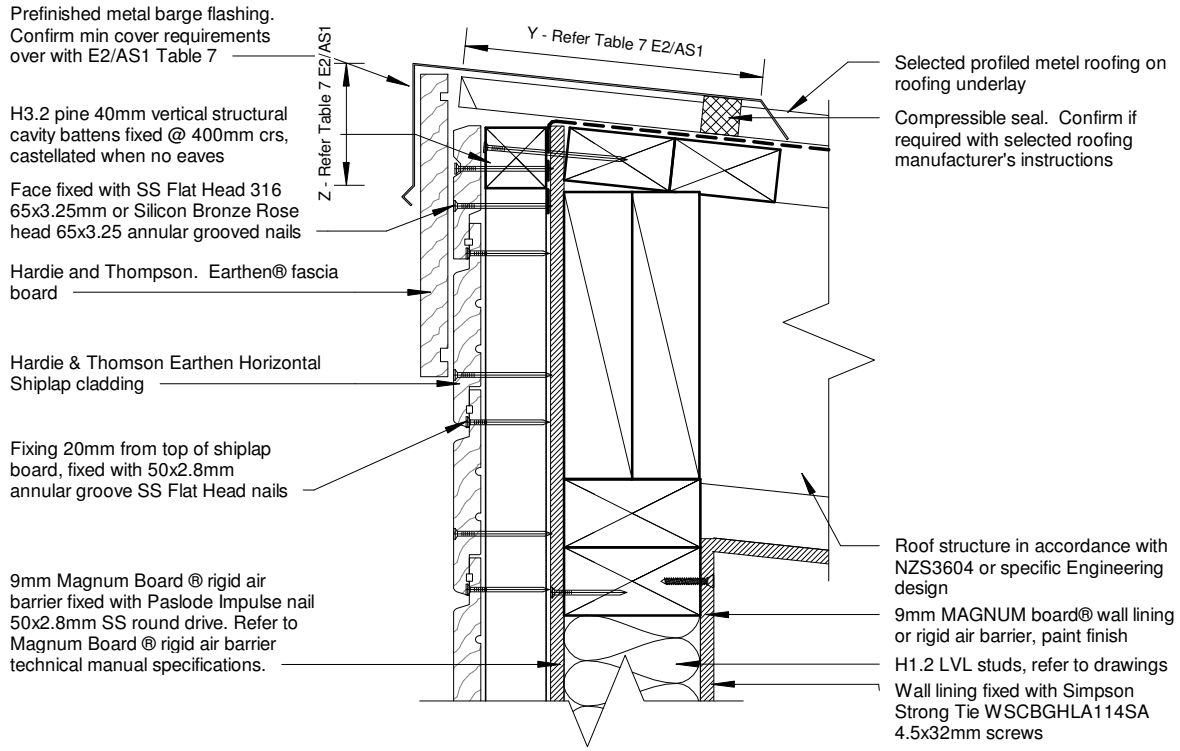

Roof - Wall ridge - Section Detail

1 : 5

HT48 Horizontal Shiplap Details Roof - Wall Ridge - Section Detail

128 Montreal St. ph 03 9421977 Email admin@apdesign.co.nz www. apdesign.co.nz

06/06/2017 09:04:31
GRAPHIC SCALES

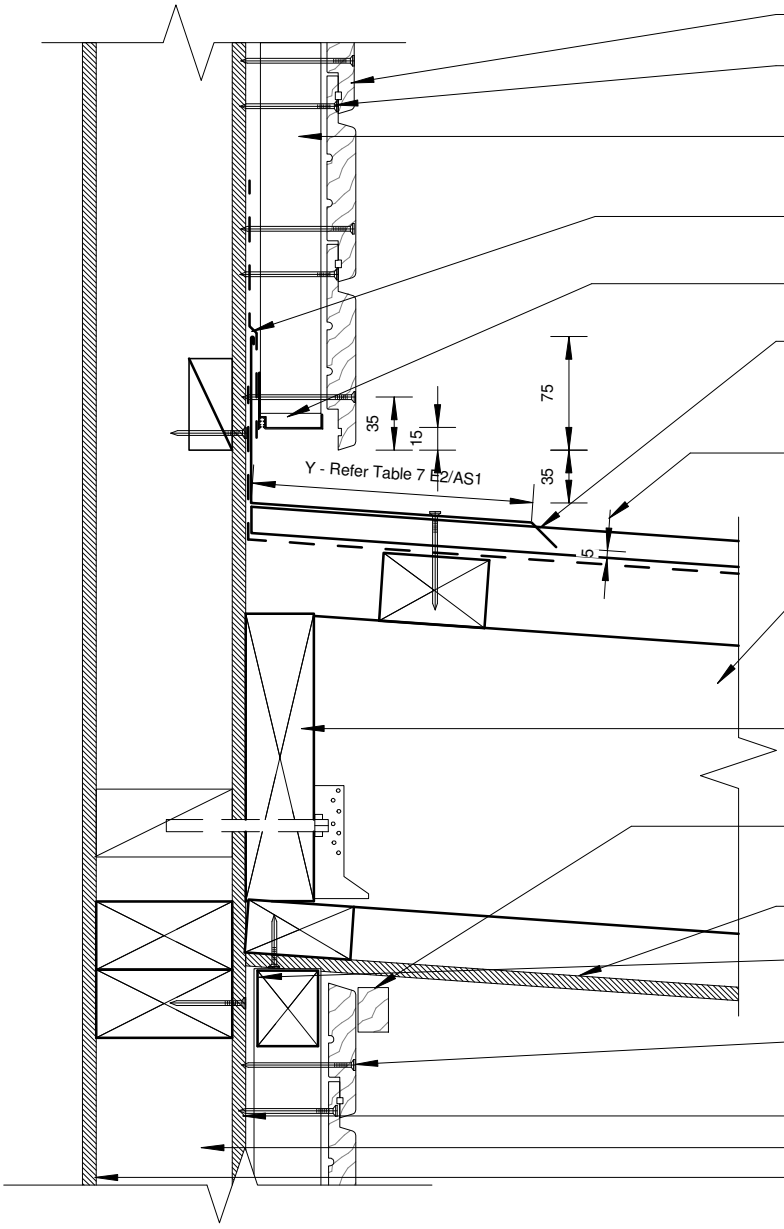

Hardie & Thomson Earthen Horizontal Shiplap cladding

Fixing 20mm from top of shiplap board, fixed with 50x2.8mm annular groove SS Flat Head nails

H3.2 pine 40mm vertical structural cavity battens fixed @ 400mm crs, castellated when no eaves

ABEP ® mulehide tape applied over top of apron flashing

Cavity closer allow 15mm drip edge to bottom of cladding

Prefinish metal apron flashing. 75mm Cover behind cladding. 35mm min. clearance between cladding and flashing. Refer to E2/AS1 Table 7 for cover over roofing

5mm max. Gap between flashing and roofing

Roof structure in accordance with NZS3504:2011 or specific engineer design

Timber stringer fixed to wall framing. Refer to NZS3604:2011

Hardie & Thompson Earthen® soffit moulding

9mm Magnum board® soffit lining. Flush stopped.

Prior to installation, pre coat back of batten with ABEP® Blue barrier liquid applied flashing

Face fixed with SS Flat Head 316 65x3.25mm or Silicon Bronze Rose head 65x3.25 annular grooved nails

9mm Magnum Board® rigid air barrier

H1.2 LVL studs, refer to drawings

9mm MAGNUM board® wall lining, paint finish

Note: Where ABEP® Blue barrier ie in contact with Biopin ® paint, cemix acrylbond must be applied before application of Biopin Paint ®

Canopy Junction - Section Detail

1 : 5

150mm 100 50 10mm 0

06/06/2017 09:04:31

GRAPHIC SCALES

HT48 Horizontal Shiplap Details Canopy Junction - Section Detail

128 Montreal St. ph 03 9421977 Email admin@apdesign.co.nz www. apdesign.co.nz

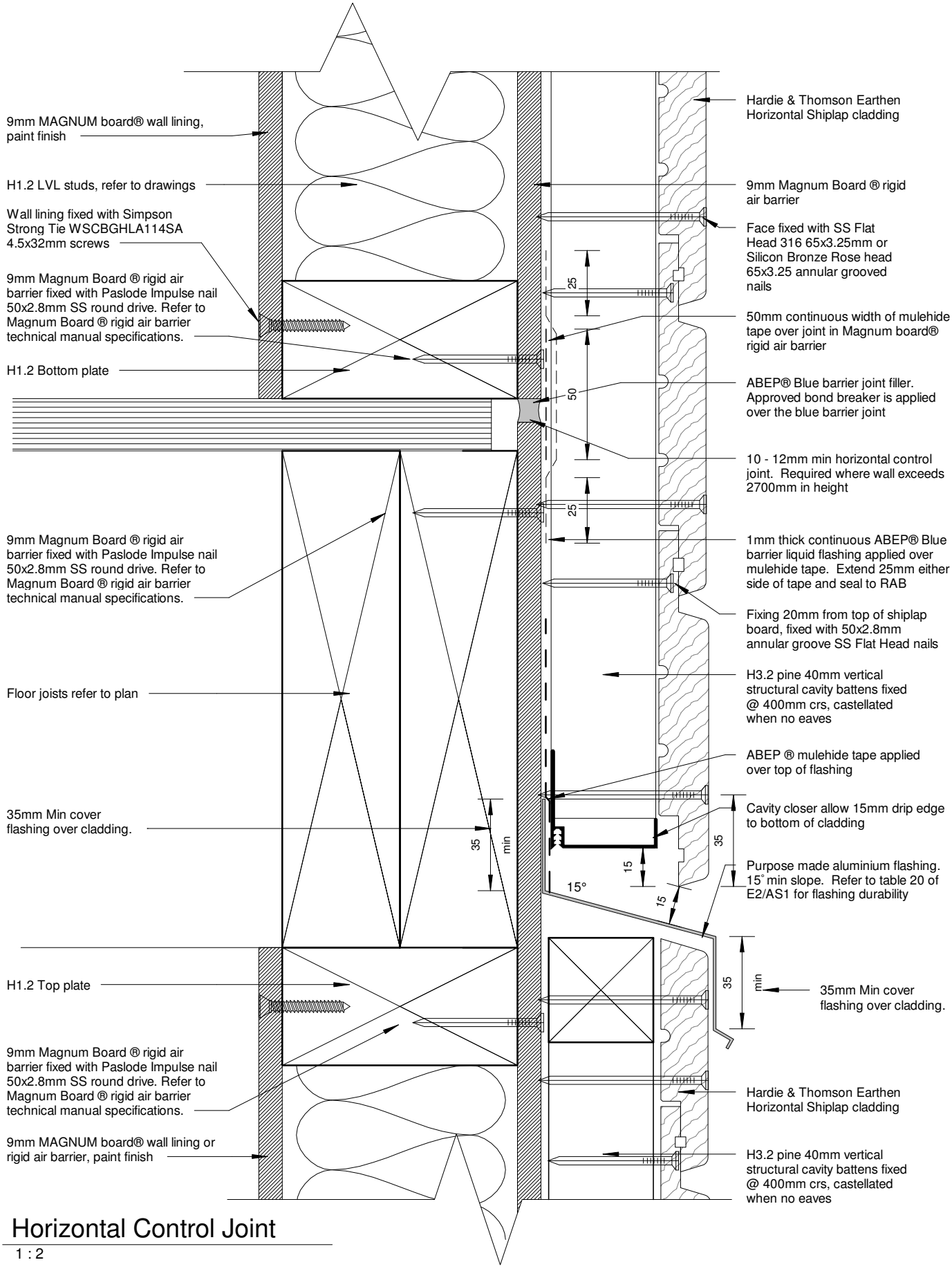

Horizontal Control Joint

1 : 2

9/14

HT48 Horizontal Shiplap Details Horizontal Control Joint

06/06/2017 09:04:32

GRAPHIC SCALES

128 Montreal St. ph 03 9421977 Email admin@apdesign.co.nz www. apdesign.co.nz

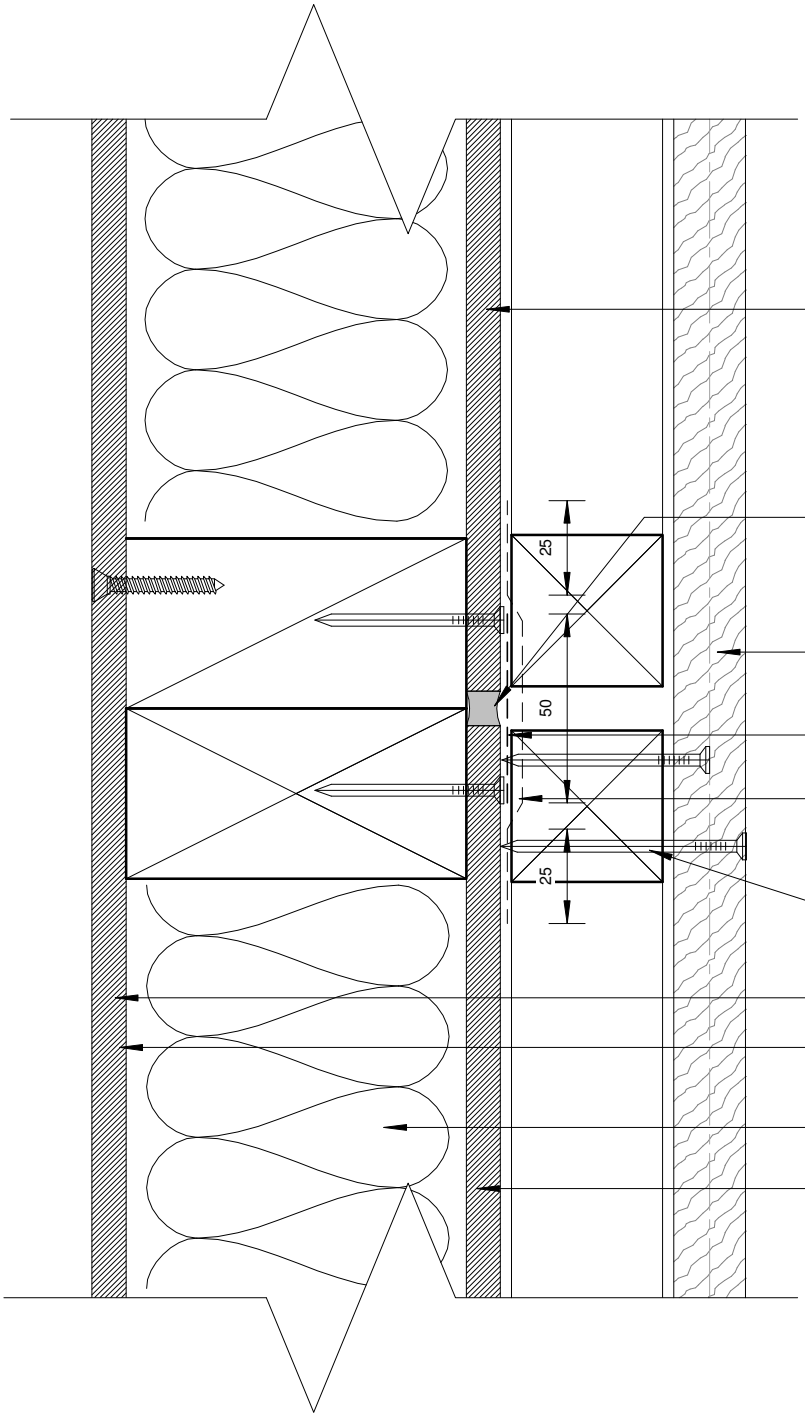

9mm Magnum Board ® rigid air barrier fixed with Paslode Impulse nail 50x2.8mm SS round drive. Refer to Magnum Board ® rigid air barrier technical manual specifications.

10 - 12mm min vertical control joint. Required where wall exceeds 6m in length. Fill with ABEP BEP® Blue barrier joint filler continuous bead of sealant

Hardie & Thomson Earthen Horizontal Shiplap cladding

50mm continuous width of mulehide tape over joint in Magnum RAB board

1mm thick continuous ABEP BEP® Blue barrier liquid flashing applied over mulehide tape. Extend 25mm either side of tape and seal to RAB

H3.2 pine 40mm vertical structural cavity battens fixed @ 400mm crs, castellated when no eaves

9mm MAGNUM board® wall lining, paint finish

Wall lining fixed with Simpson Strong Tie WSCBGHLA114SA 4.5x32mm screws

H1.2 LVL studs, refer to drawings

9mm Magnum Board ® rigid air barrier fixed with Paslode Impulse nail 50x2.8mm SS round drive. Refer to Magnum Board ® rigid air barrier technical manual specifications.

Vertical Control Joint

1 : 2

150mm 100 50 10mm 0

06/06/2017 09:04:32

10/14

HT48 Horizontal Shiplap Details Vertical Control Joint

GRAPHIC SCALES

128 Montreal St. ph 03 9421977 Email admin@apdesign.co.nz www. apdesign.co.nz

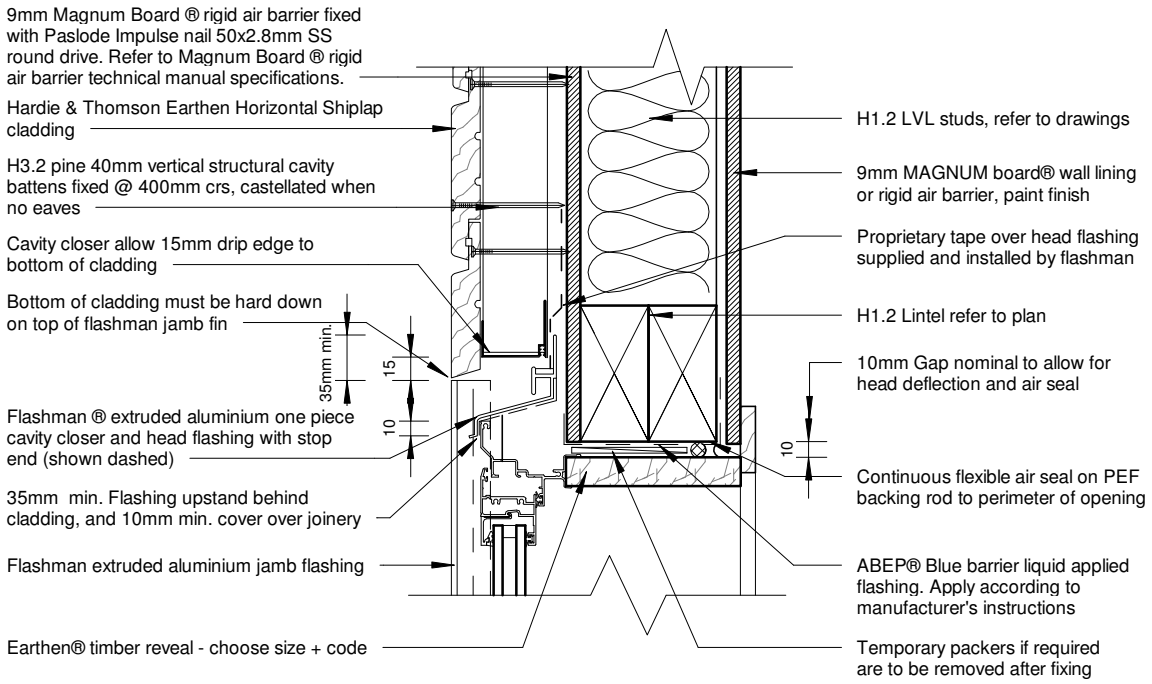

Typical Head Detail

1 : 5

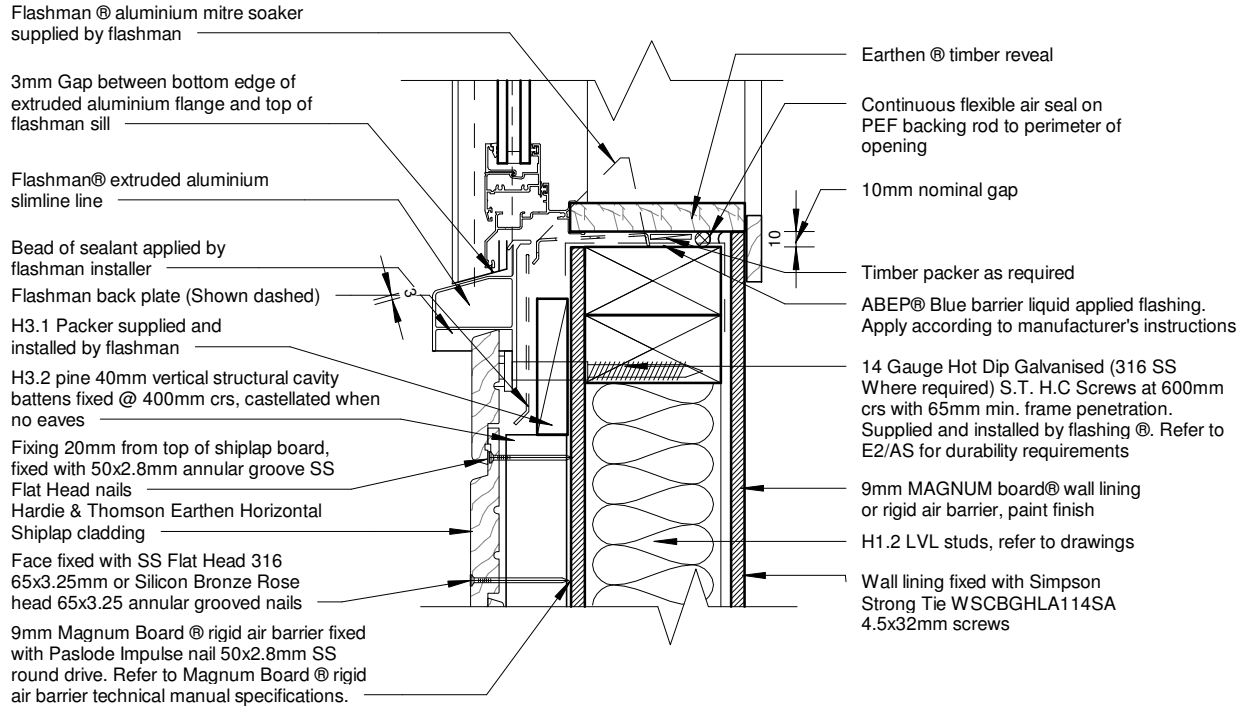

Typical Sill Detail

1 : 5

150mm 100 50 10mm 0

06/06/2017 09:04:32

GRAPHIC SCALES

11/14

HT48 Horizontal Shiplap Details Typical Head and Sill Detail

128 Montreal St. ph 03 9421977 Email admin@apdesign.co.nz www. apdesign.co.nz

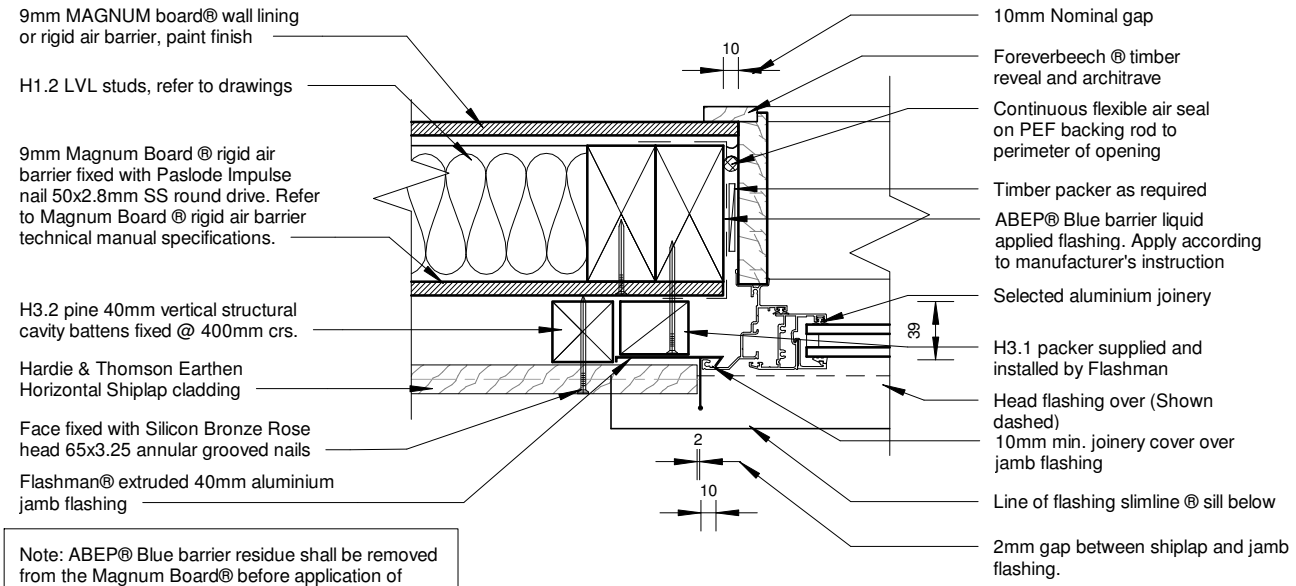

Note: ABEP® Blue barrier residue shall be removed from the Magnum Board® before application of Forevebreath paint.

DO NOT FIX THROUGH JAMB FLASHING

Typical Jamb Detail

1 : 5

150mm 100 50 10mm 0

4/07/2018 4:13:45 PM

HEALTH BASED BUILDING™ natural selection

12/14

Horizontal Shiplap Details Typical Jamb Detail

DESIGN ARCHITECTURE

GRAPHIC SCALES

128 Montreal St. ph 03 9421977 Email admin@apdesign.co.nz www. apdesign.co.nz

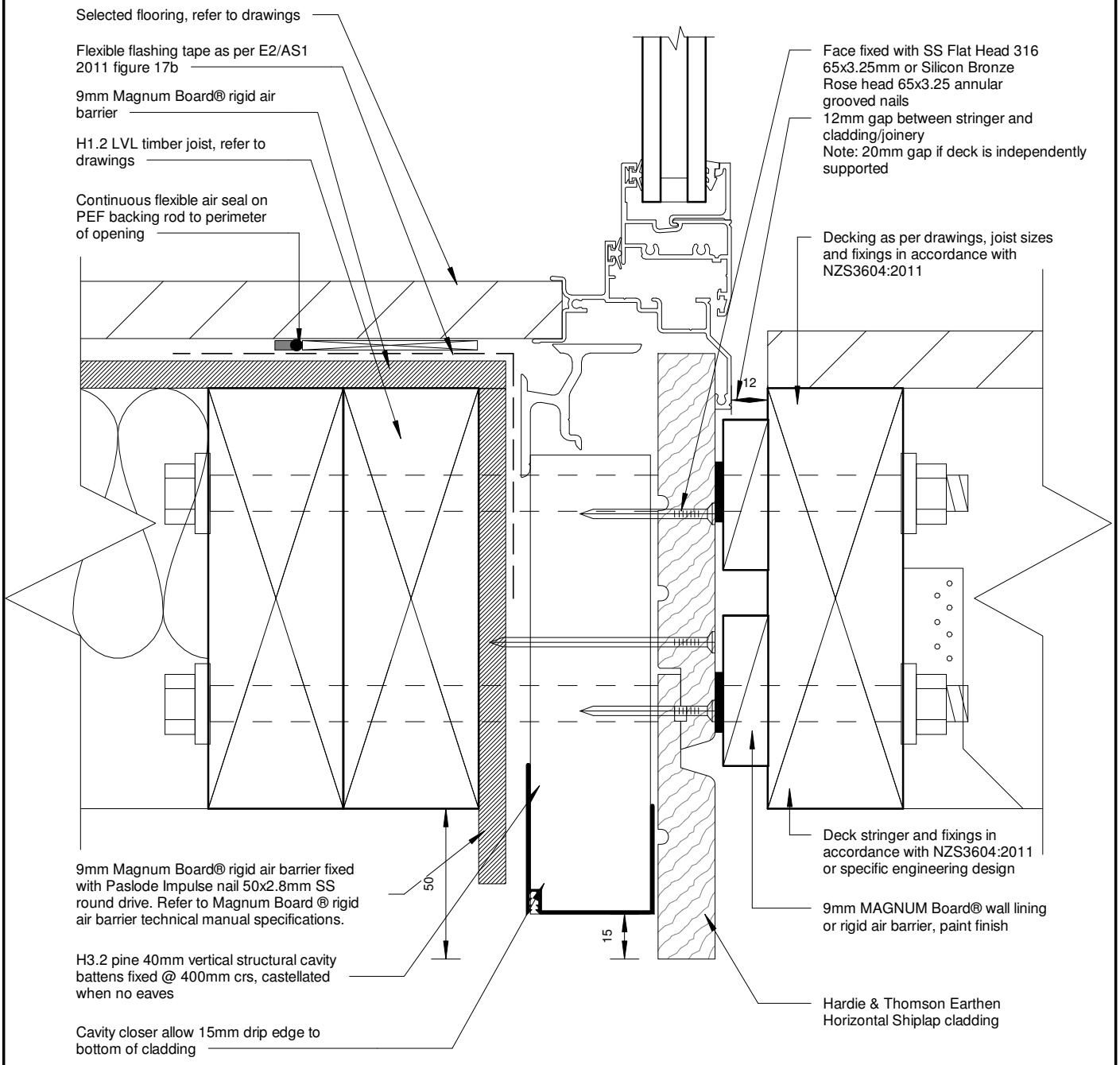

Deck Threshold Detail

1 : 2

150mm 100 50 10mm 0

06/06/2017 09:04:32

GRAPHIC SCALES

13/14

HT48 Horizontal Shiplap Details Deck Threshold Detail

128 Montreal St. ph 03 9421977 Email admin@apdesign.co.nz www. apdesign.co.nz

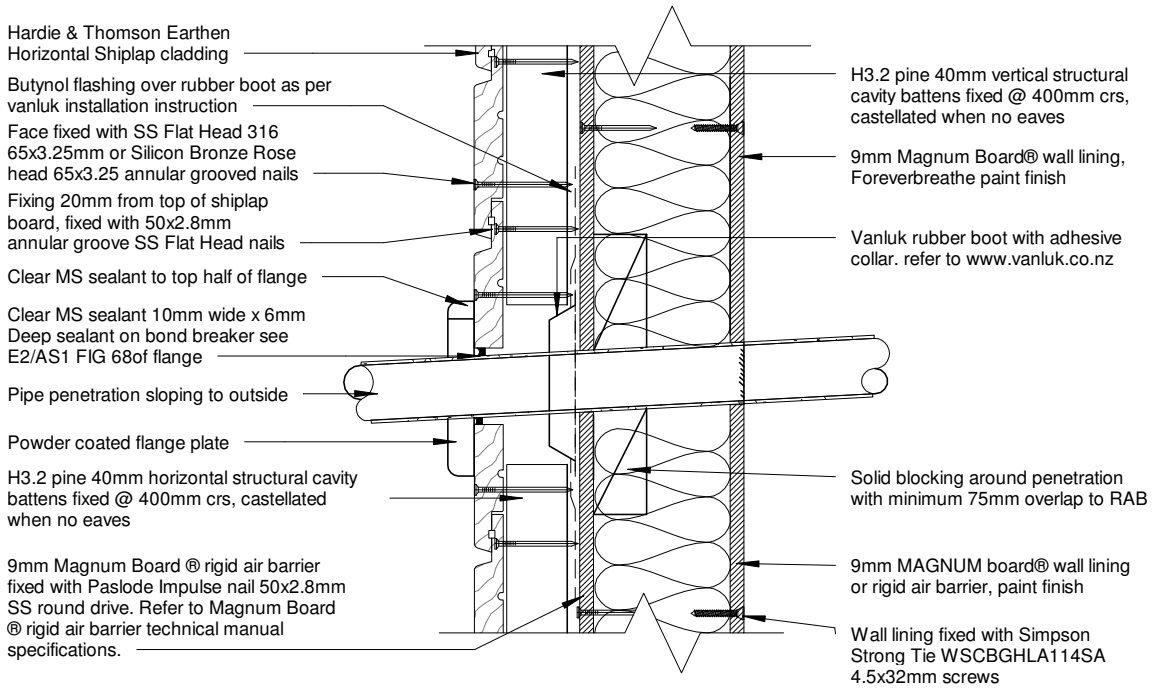

Note:
1. Where ABEP® Blue barrier is in contact with Biopin ® paint, cemix acrylbond must be applied before application of biopin paint ®

Pipe Penetration Section Detail

1 : 5

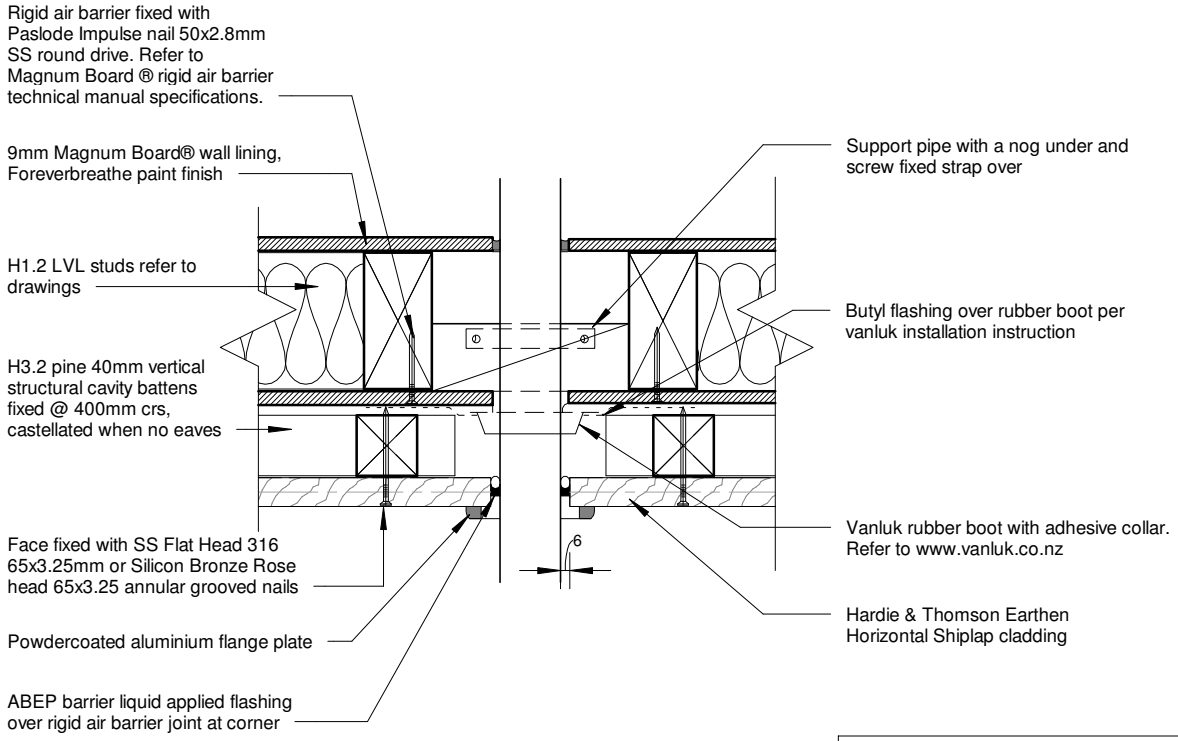

Note: Alternative option is to remove flange plate and provide clear sealant in place of ABEP Blue barrier joint filler

Pipe Penetration Plan Detail

1 : 5

150mm 100 50 10mm 0

06/06/2017 09:04:33

GRAPHIC SCALES

HT48 Horizontal Shiplap Details Pipe Penetration - Plan & Section Detail

128 Montreal St. ph 03 9421977 Email admin@apdesign.co.nz www. apdesign.co.nz

NAIL FIXINGS

pre-bore using 3.5mm drill size

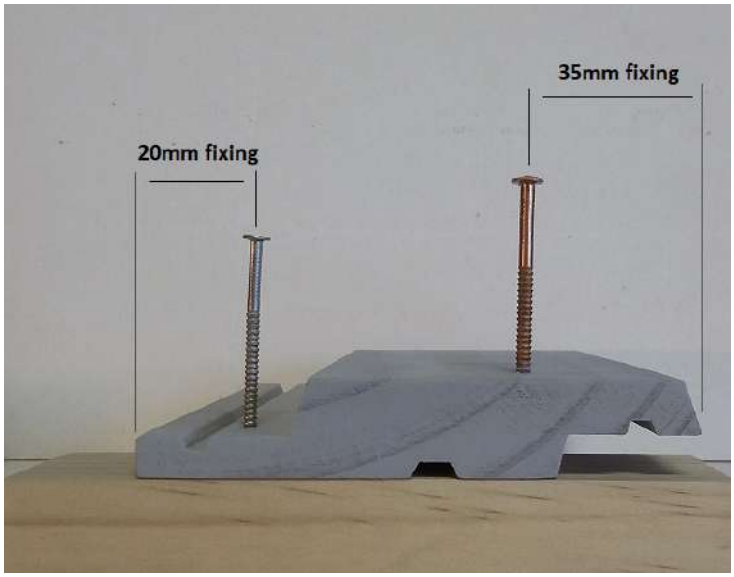

Installed Horizontally on 40mm batten

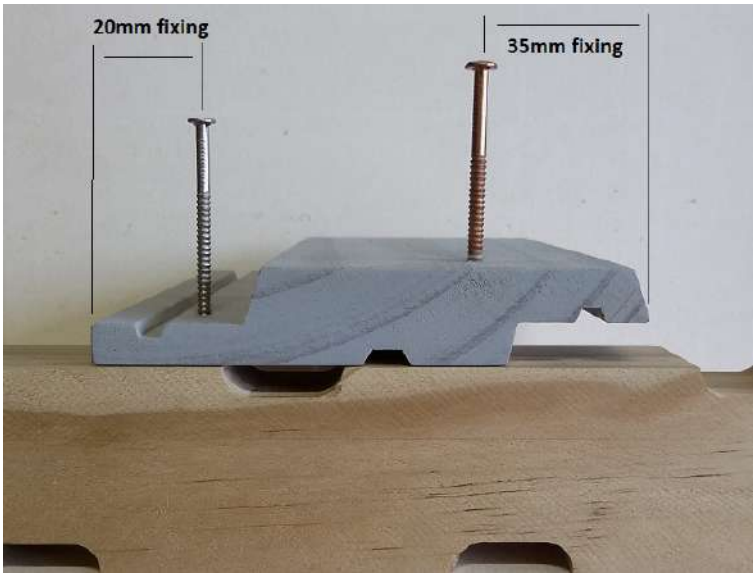

Installed vertically on 40mm castellated batten

Scarf Joints

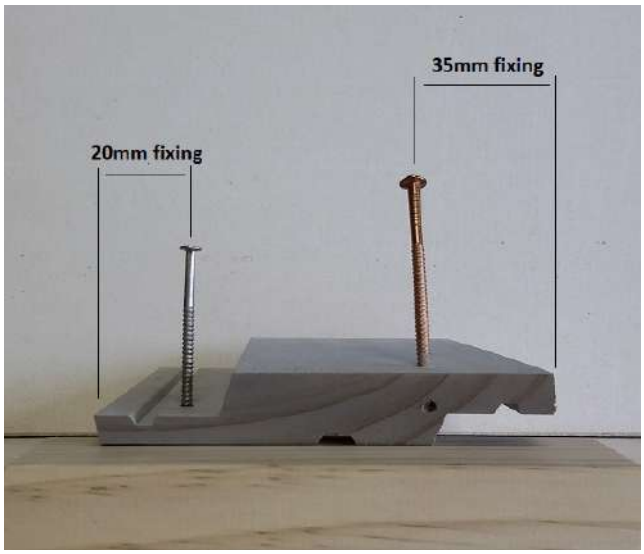

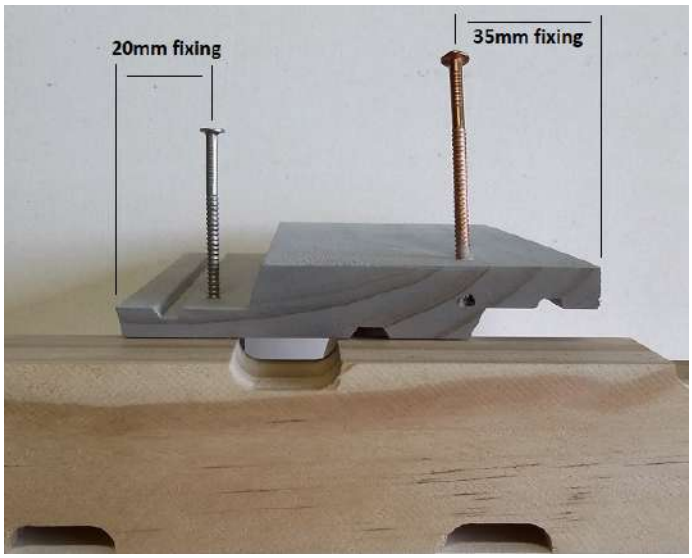

Positioning of boards including drip grooves

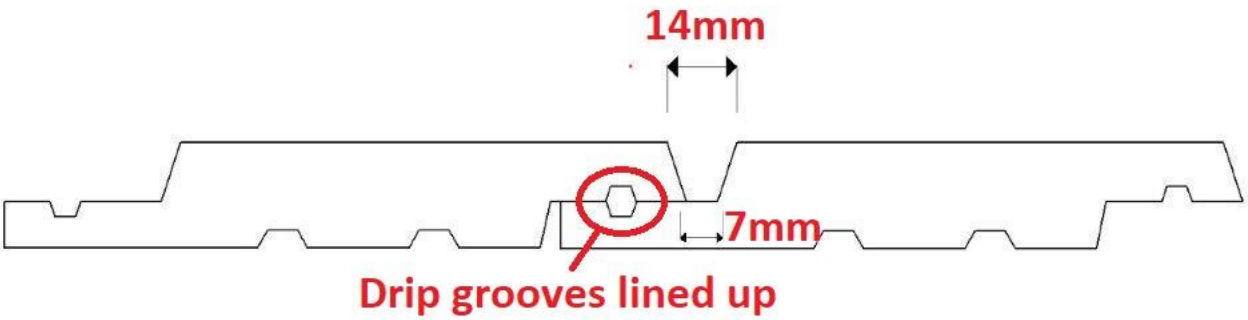

Foreverbreathe Exterior Oil

Foreverbreathe Exterior Oil finishes are made from plant based chemistry using Tung Nut Oil, Tree Resin, Hard Plant Wax, Eucalyptus Oil and Micro Earthen Pigments. Our goal has always been to make products from the finest possible ingredients to protect timber. Most mainstream petro-chemical oils contain residual poisons to help prevent the development of mould spores. While they work with varying degrees of success, such poisons are dangerous to both the health of the person applying the oil and the immediate environment. Residual poisons are particularly harmful as they have been created to remain active over a prolonged period. By formulating our oils from breathable natural ingredients, every effort has been made to slow the occurrence of mould spores while not exposing our customers and the environment to potentially harmful chemicals.

1: Preparation: First & Second Coats Uncoated Timber and Second Coat on Factory Coated Timber

12 - 25 degrees Celsius is the target temperature away from direct sunlight. The objective is to coat the timber evenly without it drying too rapidly. Rapid drying can lead to colour variations. The surface must be dry, clean and free of dust. Timber moisture content should be no more than 16%.

2: Uncoated Timber:

Mix Foreverbreathe Oil thoroughly by shaking container to allow oil and pigment to mix and ensure no separation. Refer application kit
https://www.healthbasedbuilding.com/coatings/foreverbreathe-exterior-oil-application-kit

Lay coated timber away from contact with ground and away from direct sunlight with good ventilation. The deck structure is a good platform to use. Ensure timber is separated to prevent variation in coated appearance which can occur if coating in is contact with coating. Apply oil to back face and edges. Leave to dry for no less than 1 hour before applying oil to the top face. Ensure excess oil is not left to pool on top face as this may establish colour variations. The timber can now be installed with a 2nd coat applied to top face. **NOTE:** Ensure cut ends of timber are coated during the installation process.

3: Factory Coated Timber: Where factory pre-coated timber is involved apply oil to all visible timber using method described in section 2 after installation.

Clean Up: White spirit can be used to clean tools etc. Safety Instructions: Keep out of reach of children. Do not pour oil residue into the sewer. Let the remnants dry out and dispose of with your domestic rubbish collection. WARNING: DO NOT LEAVE OIL COATED PRODUCT IN A CRUMPLED OR COMPRESSED STATE AS SELF COMBUSTION CAN OCCUR

Deck Timber Maintenance & Re-Coating:

Refer
https://healthbasedbuilding.co.nz/documents/TD-025b-Foreverbeech90x23Deckingfinal_v1.5_22.1.20.pdf

Cladding Timber Maintenance & Re-Coating: To maintain the original decorative appearance, cleaning and re-coating should be every 3-5 years. Cleaning only can be within shorter periods every 12 months using a soft bristle brush and low pressure water system to remove dust particulate. Once cleaned re-coating can be as per the 2nd coat application process described in section 3.

Date: 10 April 2012 Version No : 2

MATERIAL SAFETY DATA SHEET

1. Identification Of The Material & Supplier

Product Name: Foreverbreathe Exterior / Deck Oil

Other Names(s):

Chemical Characterization:
Mixture of binding agents based on plant oils, natural waxes, metal oxide pigments and dearomatized hydrocarbons.

Use or Description:
Coating exterior decks and timberwork

Emergency Telephone: 0275 5450855
National Poisons & Hazardous Chemicals
Information Centre: 0800 POISON (0800 764 766)
NZ Emergency Services: Dial 111 (if in doubt)

2. Hazards Identification

Hazard Classification:
6.1E - Substance that may be harmful if swallowed and enters airways.
6.3B - Substance that may cause mild skin irritation.

Hazard statement codes:
H304 May be harmful if swallowed and enters airways.
H316 Causes mild skin irritation.

Precautionary statement codes - prevention:
P101 If medical advice is needed, have product container or label at hand.
P102 Keep out of the reach of children.
P103 Read label before use.
P210 Keep away from heat/sparks/open flames/hot surfaces. No smoking.
P280 Wear protective gloves/protective clothing/eye protection/face protection.

Precautionary statement codes - Response
P314 Get medical advice/attention if you feel unwell.
P332 + P313 If skin irritation occurs: Get medical advice/attention.
P370+P378 In case of fire: Use foam, carbon dioxide or dry chemical.

3. Composition / Information On Ingredients

Potentially Hazardous Ingredients	% by weight (approx)	TLV (TWA) mg/m3	TLV (TWA) ppm	STEL (TWA) mg/m3	STEL (TWA) ppm	Cas No.
Alkanes	45-55	1200	171			90622-58-5
Zirconium Drier	0.1-1	100				94581-21-2
Zinc Drier	0.1-1	100				84418-50-8
Manganese Drier	0.1-1	100				37449-19-7

4. First Aid Measures

Inhalation Move the victim to fresh air immediately. Begin artificial respiration if breathing has stopped.

Skin Contact If skin or hair contact occurs, remove contaminated clothing and flush skin and hair with running water.

Eye Contact Hold eyelids and flush the eye continuously with running water. Continue flushing for at least 15minutes. Get medical assistance. if irritation persists.

Ingestion If swallowed, do not induce vomiting. Give a glass of water if person is conscious. Begin artificial respiration if the victim is not breathing. Use mouth to nose rather than mouth to mouth. Obtain medical attention.

Health Hazard Information: Treat According to symptoms. Gastric lavage may be indicated if ingested. Do not wait for symptoms to develop. General measures should be taken to control acidosis and maintain urine output.

5. Fire Fighting Measures

Extinguishing Media to be used:
Dry Chemical
Alcohol Foam

Special Fire Fighting Procedures
Use water to keep fire exposed containers cool. Do not use a heavy water stream, in order to avoid the fire to extend. If a leak or spill has not ignited, use water spray to disperse the vapours and to protect personnel attempting to stop leak. Prevent extinguishing media from escaping to drains and waterways.

Unusual Fire and Explosion Hazards
Vapour density heavier than air. This product is combustible.

6. Accidental Release Measures

Spill and Leak Procedure
Eliminate every possible source of ignition. Avoid breathing vapour and contact with skin, eyes and clothing.
Wear recommended personal protective equipment.
Shut off leaks if without risks.
If Material Is Released Or Spilled: Absorb on fire retardant treated sawdust, diatomaceous earth, etc.
Prevent entry of product into public water, sewers, or soil.
Shovel up and dispose of at appropriate waste disposal facility in accordance with current applicable laws and regulations, and product characteristics at time of disposal.

7. Handling & Storage

Handling
Avoid prolonged repeated skin contact. Avoid contact with eyes. Wear safety glasses. Avoid inhalation of vapours or mists.
Use in well ventilated area away from all ignition sources. Take special care to avoid static electric discharge.
Keep container closed.

Storage
Store in a cool area. Do not pressurise, cut, heat or weld containers- residual vapours are flammable.
This product is combustible and will fuel a fire in progress.

8. Exposure Control / Personal Protection

Recommended Personal Protective Equipment to be worn during use of product:
Protective Overalls
Synthetic Apron
Safety Glasses
Splash Goggles
Dust & Vapour Respirator
Gloves
Boots

9. Physical And Chemical Properties

Appearance and Odour
Low viscosity liquid in various colours with a solvent odour
Density 0.800
Boiling Range,°C 195 - 203
Viscosity N/A
Flash Point° 63
Evaporation Rate (BuAc=100) NE
Vapour Pressure,mm Hg at 20° 0.069
Vapour Density (Air=1) >1.0
% Volatile Matter (by weight) NE
Solubility in Water Negligible
Melting Point/Freezing Point,°C NA
Aromatics, % NE
Aniline Point, °C (Mixed)
Colour Various
Refractive Index, @ 20° NE
Residue On Evaporation, mg/100ml NE
pH NA
Flammability Limit, %vol

Lower (LEL)	Upper (UEL)	Auto Ignition Temperature, °C
0.7	5.4	365

NA = Not Applicable, NE = Not Established,
NR = Not Regulated Against D = Decomposes

10. Stability And Reactivity

Reactivity Data
Stable at room temperature and pressure.
Avoid sources of heat and ignition, open flames.

Hazardous Decomposition By products
Carbon dioxide and carbon monoxide.

Hazardous Polymerisation
Will Not Occur

11. Toxicological Information

Acute Effects of Overexposure

Ingestion
Small amounts of liquid aspirated into the lungs during ingestion, or from vomiting, may cause chemical pneumonitis, or pulmonary oedema. Ingesting large amounts of this product will result in headaches, nausea, dizziness and tracheal burning.

Skin Contact
This product is mildly irritating to the skin with prolonged exposure. It may result in dryness and cracking of the skin.

Inhalation
Vapour concentrations above recommended exposure levels are irritating to the nose and throat. The inhalation of this product in large quantities will yield moderate discomfort. Over exposure may be evident through symptoms of dizziness, nausea, headaches and other central nervous system effects.

Eye Contact
This product may be mildly irritating to the eyes, but will not permanently damage the eye tissue.

Mutagenic Effects None

Reproductive Effects None

Chronic Effects No chronic health data is available for this product.

12. Ecological Information

Not identified as being harmful to aquatic life.

13. Disposal Considerations

This product can degrade rapidly in air. Expected to be removed in wastewater treatment. Based upon data for similar components or estimated data, this product is expected to be biodegradable according to OECD guidelines.

14. Transport Information

Land Transport ADR/RID
UN No: Not regulated **Non DG**
Technical name: Natural Wood Oil

Marine Transport IMDG/GGV
UN No: Not regulated **Non DG**
Technical name: Natural Wood Oil

Air Transport ICA/IATA
UN No: Not regulated **Non DG**
Technical name: Natural Wood Oil

15. Regulatory Information

This product is not classified as dangerous goods.

16. Other Information

IF PRINTED THIS MSDS SHEET IS UNCONTROLLED.

For advice, contact National Poison Centre (Phone New Zealand: 0800 764 766) or a doctor.

Natural House Company urges each customer or recipient of this MSDS to study it carefully to become aware of and the hazards associated with the product.
The reader should consider consulting reference works or individuals who are experts in ventilation, toxicology, and fire prevention, as necessary or appropriate to use and understand the data contained in this MSDS. To promote safe handling, each customer or recipient should:

(1) notify its employees, agents, contractors and others whom it knows or believes will use this material or the information in this MSDS and any other information regarding hazards of safety;
(2) furnish this same information to each of its customers for the product; and
(3) request its customers to notify their employees, customers, and other users of the product of this information.

NOTE: The information and recommendations contained in this data sheet have been compiled from sources believed to be reliable and represent the best current opinion on the subject. No warranty, guarantee or representation is made by the company as to the absolute correctness or sufficiency of any representation contained in this data sheet and the company assumes no responsibility in connection therewith. Nor can it be assumed that all acceptable safety measures are contained in this data sheet or that other additional measures may not be required under particular or exceptional circumstances or conditions.

SAFETY DATA SHEET

Product Name **MICROPRO COPPER BASED TIMBER PRESERVATIVE**

1. IDENTIFICATION OF THE MATERIAL AND SUPPLIER

Supplier name	**KOPPERS PERFORMANCE CHEMICALS AUSTRALIA PTY LTD**
Address	Cafpirco Road, Mount Gambier, SA, 5290, AUSTRALIA
Telephone	(08) 8723 1399
Fax	(08) 8723 0010
Emergency	1800 088 809
Email	kpc.admin@koppers.com.au
Web site	www.kopperspc.com.au
Synonym(s)	MICROPRO 200C • MICROPRO COPPER BASED TIMBER PRESERVATIVE
Use(s)	INDUSTRIAL APPLICATIONS • TIMBER PRESERVATIVE
SDS date	12 December 2014

2. HAZARDS IDENTIFICATION

CLASSIFIED AS HAZARDOUS ACCORDING TO SAFE WORK AUSTRALIA CRITERIA

Risk Phrases

R22	Harmful if swallowed.
R36/37/38	Irritating to eyes, respiratory system and skin.

Safety Phrases

S24	Avoid contact with skin.
S26	In case of contact with eyes, rinse immediately with plenty of water and seek medical advice
S36	Wear suitable protective clothing.

CLASSIFIED AS A DANGEROUS GOOD BY THE CRITERIA OF THE ADG CODE

UN Number	3082	**Transport Hazard Class**	9
Packing Group	III	**Hazchem Code**	2X

3. COMPOSITION/ INFORMATION ON INGREDIENTS

Ingredient	CAS Number	EC Number	Content
SODIUM NITRITE	7632-00-0	231-555-9	2%
COPPER (II) CARBONATE HYDROXIDE	12069-69-1	235-113-6	57.6%
DISPERSANT(S)	-	-	7 to 10%
WATER	7732-18-5	231-791-2	Remainder

4. FIRST AID MEASURES

Eye	If in eyes, hold eyelids apart and flush continuously with running water. Continue flushing until advised to stop by a Poisons Information Centre, a doctor, or for at least 15 minutes.
Inhalation	If inhaled, remove from contaminated area. Apply artificial respiration if not breathing.
Skin	If skin or hair contact occurs, remove contaminated clothing and flush skin and hair with running water. Continue flushing with water until advised to stop by a Poisons Information Centre or a doctor.
Ingestion	For advice, contact a Poison Information Centre on 13 11 26 (Australia Wide) or a doctor (at once).

Advice to doctor Treat symptomatically.

First aid facilities Eye wash facilities and safety shower should be available.

5. FIRE FIGHTING MEASURES

Flammability Non flammable. May evolve toxic gases if strongly heated.

Fire and explosion No fire or explosion hazard exists.

Extinguishing Use an extinguishing agent suitable for the surrounding fire.

Hazchem code 2X

2 Fine Water Spray.

X Wear liquid-tight chemical protective clothing and breathing apparatus. Contain spill and run-off.

6. ACCIDENTAL RELEASE MEASURES

Personal precautions Wear Personal Protective Equipment (PPE) as detailed in section 8 of the SDS.

Environmental precautions Prevent product from entering drains and waterways.

Methods of cleaning up Contain spillage, then cover / absorb spill with non-combustible absorbent material (vermiculite, sand, or similar), collect and place in suitable containers for disposal.

References See Sections 8 and 13 for exposure controls and disposal.

7. STORAGE AND HANDLING

Storage Store in a cool, dry, well ventilated area, removed from incompatible substances and foodstuffs. Ensure containers are adequately labelled, protected from physical damage and sealed when not in use.

Handling Before use carefully read the product label. Use of safe work practices are recommended to avoid eye or skin contact and inhalation. Observe good personal hygiene, including washing hands before eating. Prohibit eating, drinking and smoking in contaminated areas.

8. EXPOSURE CONTROLS / PERSONAL PROTECTION

Exposure standards

Ingredient	Reference	TWA		STEL	
		ppm	mg/m³	ppm	mg/m³
Copper, dusts & mists (as Cu)	SWA (AUS)	--	1	--	--

Biological limits No biological limit allocated.

Engineering controls Avoid inhalation. Use in well ventilated areas. Where an inhalation risk exists, mechanical extraction ventilation is recommended. Maintain vapour levels below the recommended exposure standard.

PPE

Eye / Face Wear splash-proof goggles.

Hands Wear PVC or rubber gloves.

Body When using large quantities or where heavy contamination is likely, wear coveralls.

Respiratory Where an inhalation risk exists, wear a Type B (Inorganic gases and vapours) respirator.

9. PHYSICAL AND CHEMICAL PROPERTIES

Appearance	OPAQUE LIGHT GREEN LIQUID
Odour	LATEX PAINT LIKE ODOUR
Flammability	NON FLAMMABLE
Flash point	NOT RELEVANT
Boiling point	NOT AVAILABLE
Melting point	NOT AVAILABLE
Evaporation rate	NOT AVAILABLE
pH	9.21
Vapour density	NOT AVAILABLE
Specific gravity	1.76
Solubility (water)	INSOLUBLE
Vapour pressure	NOT AVAILABLE
Upper explosion limit	NOT RELEVANT
Lower explosion limit	NOT RELEVANT
Partition coefficient	NOT AVAILABLE
Autoignition temperature	NOT AVAILABLE
Decomposition temperature	NOT AVAILABLE
Viscosity	NOT AVAILABLE
Explosive properties	NOT AVAILABLE
Oxidising properties	NOT AVAILABLE
Odour threshold	NOT AVAILABLE
% Volatiles	NOT AVAILABLE

10. STABILITY AND REACTIVITY

Chemical stability	Stable under recommended conditions of storage.
Conditions to avoid	Avoid heat, sparks, open flames and other ignition sources.
Material to avoid	Incompatible with oxidising agents (e.g. hypochlorites) and acids (e.g. nitric acid). Also incompatible with reducing agents (e.g. sulphites), sodium hypobromite, acetylene, hydrazine and nitromethane.
Hazardous Decomposition Products	May evolve toxic gases if heated to decomposition.
Hazardous Reactions	Polymerization is not expected to occur.

11. TOXICOLOGICAL INFORMATION

Health Hazard Summary	Harmful - irritant. This product has the potential to cause adverse health effects with over exposure. Use safe work practices to avoid eye or skin contact and inhalation. Chronic exposure may result in liver, kidney and blood damage.
Eye	Irritant. Contact may result in irritation, lacrimation, pain and redness.
Inhalation	Irritant. Over exposure to vapours may result in respiratory irritation, nausea, dizziness and headache. Low vapour pressure may reduce the likelihood of inhalation.
Skin	Irritant. Contact may result in irritation, redness, rash and dermatitis.
Ingestion	Harmful. Ingestion may result in nausea, vomiting, abdominal pain and diarrhoea. Chronic exposure may result in liver, kidney and blood damage.
Toxicity data	SODIUM NITRITE (7632-00-0) LC50 (inhalation) 5.5 mg/m³/4 hours (rat) LD50 (ingestion) 85 mg/kg (rat) COPPER (II) CARBONATE HYDROXIDE (12069-69-1) LD50 (ingestion) 159 mg/mg (rabbit) LDLo (ingestion) 900 mg/kg (duck)

12. ECOLOGICAL INFORMATION

Toxicity	No information provided.
Persistence and degradability	No information provided.
Bioaccumulative potential	No information provided.
Mobility in soil	No information provided.

Other adverse effects Soluble copper compounds are highly toxic to aquatic and plant life. Insoluble copper compounds are significantly less environmentally hazardous. Positive potential for food chain accumulation.

13. DISPOSAL CONSIDERATIONS

Waste disposal For small amounts, absorb with sand, vermiculite or similar and dispose of to an approved landfill site. For large quantities, contact the manufacturer/supplier for additional information. Prevent contamination of drains and waterways as aquatic life may be threatened and environmental damage may result.

Legislation Dispose of in accordance with relevant local legislation.

14. TRANSPORT INFORMATION

CLASSIFIED AS A DANGEROUS GOOD BY THE CRITERIA OF THE ADG CODE

	LAND TRANSPORT (ADG)	SEA TRANSPORT (IMDG / IMO)	AIR TRANSPORT (IATA / ICAO)
UN Number	3082	3082	3082
Proper Shipping Name	ENVIRONMENTALLY HAZARDOUS SUBSTANCE, LIQUID, N.O.S.	ENVIRONMENTALLY HAZARDOUS SUBSTANCE, LIQUID, N.O.S.	ENVIRONMENTALLY HAZARDOUS SUBSTANCE, LIQUID, N.O.S.
Transport Hazard Class	9	9	9
Packing Group	III	III	III

Environmental hazards No information provided

Special precautions for user

Hazchem code 2X

GTEPG 9C1

EMS F-A, S-F

15. REGULATORY INFORMATION

Poison schedule Classified as a Schedule 6 (S6) Standard for the Uniform Scheduling of Medicines and Poisons (SUSMP).

Inventory Listing(s) **AUSTRALIA: AICS (Australian Inventory of Chemical Substances)**
All components are listed on AICS, or are exempt.

16. OTHER INFORMATION

Additional information EXPOSURE STANDARDS - TIME WEIGHTED AVERAGES: Exposure standards are established on the premise of an 8 hour work period of normal intensity, under normal climatic conditions and where a 16 hour break between shifts exists to enable the body to eliminate absorbed contaminants. In the following circumstances, exposure standards must be reduced: Strenuous work conditions; hot, humid climates; high altitude conditions; extended shifts (which increase the exposure period and shorten the period of recuperation).

RESPIRATORS: In general the use of respirators should be limited and engineering controls employed to avoid exposure. If respiratory equipment must be worn ensure correct respirator selection and training is undertaken. Remember that some respirators may be extremely uncomfortable when used for long periods. The use of air powered or air supplied respirators should be considered where prolonged or repeated use is necessary.

PERSONAL PROTECTIVE EQUIPMENT GUIDELINES:
The recommendation for protective equipment contained within this report is provided as a guide only. Factors such as method of application, working environment, quantity used, product concentration and the availability of engineering controls should be considered before final selection of personal protective equipment is made.

HEALTH EFFECTS FROM EXPOSURE:
It should be noted that the effects from exposure to this product will depend on several factors including: frequency and duration of use; quantity used; effectiveness of control measures; protective equipment used and method of application. Given that it is impractical to prepare a ChemAlert report which would encompass all possible scenarios, it is anticipated that users will assess the risks and apply control methods where appropriate.

Abbreviations

ACGIH	American Conference of Governmental Industrial Hygienists
CAS #	Chemical Abstract Service number - used to uniquely identify chemical compounds
CNS	Central Nervous System
EC No.	EC No - European Community Number
GHS	Globally Harmonized System
IARC	International Agency for Research on Cancer
LC50	Lethal Concentration, 50% / Median Lethal Concentration
LD50	Lethal Dose, 50% / Median Lethal Dose
mg/m³	Milligrams per Cubic Metre
OEL	Occupational Exposure Limit
pH	relates to hydrogen ion concentration using a scale of 0 (high acidic) to 14 (highly alkaline).
ppm	Parts Per Million
STEL	Short-Term Exposure Limit
STOT-RE	Specific target organ toxicity (repeated exposure)
STOT-SE	Specific target organ toxicity (single exposure)
SUSMP	Standard for the Uniform Scheduling of Medicines and Poisons
SWA	Safe Work Australia
TLV	Threshold Limit Value
TWA	Time Weighted Average

Revision history

Revision	Description
2.1	Standard SDS Review
2.0	Standard SDS Review
1.0	Initial SDS creation

Report status

This document has been compiled by RMT on behalf of the manufacturer, importer or supplier of the product and serves as their Safety Data Sheet ('SDS').

It is based on information concerning the product which has been provided to RMT by the manufacturer, importer or supplier or obtained from third party sources and is believed to represent the current state of knowledge as to the appropriate safety and handling precautions for the product at the time of issue. Further clarification regarding any aspect of the product should be obtained directly from the manufacturer, importer or supplier.

While RMT has taken all due care to include accurate and up-to-date information in this SDS, it does not provide any warranty as to accuracy or completeness. As far as lawfully possible, RMT accepts no liability for any loss, injury or damage (including consequential loss) which may be suffered or incurred by any person as a consequence of their reliance on the information contained in this SDS.

Prepared by

Risk Management Technologies
5 Ventnor Ave, West Perth
Western Australia 6005
Phone: +61 8 9322 1711
Fax: +61 8 9322 1794
Email: info@rmt.com.au
Web: www.rmt.com.au.

Revision: 2.1
SDS Date: 12 December 2014

End of SDS

STORAGE AND HANDLING

Earthen

&

foreverbeech™

As the timber is kiln dried, care must be taken to make sure the product remains dry at all times before installation.

Timber must be stored on a well-ventilated level surface, on bearers at least 250mm off the ground or substrate such as concrete.

Timber must be protected from weather, direct sunlight and moisture prior to installation.

Timber must be pre-coated (first coat) to all edges, back and face before installation.

EARTHEN CLADDING AND DECKING GRADING AND SPECIFICATION

Earthen

Earthen Cladding and Decking Timber is mostly clear wood. Pictures are included to show decorative appearance includes features.

Features are most obvious in the raw state. Features do not impact structural performance or durability.

Refer to finished product pictures to establish an accurate understanding of appearance in the built environment.

All Earthen Cladding and Decking is supplied in 3.3m+ random lengths.